PAC Storage PS Scale-Out NAS Series Hardware Manual

Version 1.0

February, 2020

Table of Contents

Safety Precautions **4**
Energy Hazards Precaution 4
Installation and Operation 4
Service and Maintenance 4
Important Notice 5
ESD Precautions 5
About This Manual **5**
Revision History 6
Hardware Specifications **6**
Specification Summary 6
Package Contents **8**
System Package 8
Tray EPE Content (for PS 6316/6324/6416/6424/6425) 9
Tray Box Content (for PS 6360/6460) 9
Host Board Box Content (optional) 9
Cable Management Arm (CMA) and Rail Boxes (for PS 6360/6460) 9
Power Cord, Cable, and Accessory Boxes 10
Pre-installed Components in the Enclosure Chassis 11
Rackmount Kit 11
Product Introduction **11**
Overview 11
Major Components 12
Chassis 13
Front Panel 13
Rear Panel 15
Internal Backplane 16
Front Panel Components 16
LED and Buttons Panel 16
Drive Tray Bezel 18
Rear Panel Components 18
Controller Module Interface 18
Controller Module Interfaces of the JBOD Models 19
PSUs and Cooling Modules 20
Supercapacitor and Flash Backup Module 22
System Monitoring Features 23
Expansion Enclosure Support 23
Audible Alarms 24
Hot-Swappable Components 24
Hardware Installation **24**
Installation Prerequisites 24

Installation Procedures 25
Unpacking the System 25
Installing the Rackmount Kit.....26
Installing the Hard Drives 38
Installing the Host Boards 46
Connections 49
General Considerations in Connecting Devices 49
Expansion Connections 50
Cluster Connection 51
Power Connection 53
Turning Off the System 55
System Monitoring.....56
Monitoring Features.....56
LEDs.....56
Alarms and I^2C Bus.....63
System Maintenance.....63
Replaceable Components 64
Replacing the PSU/Cooling Module 64
Replacing the Controller Module 68
Replacing the Memory Module 70
Replacing the Host Board 71
Replacing the Cache Backup Module (CBM) Components 72
Replacing the Hard Drive 75
Front Panel LED Status and Response Action 78
Restoring Default System Settings 79
User Warning.....80

Safety Precautions

Read these instructions carefully before you install, operate, or transport the PS Scale-Out NAS Series systems and JBODs.

Energy Hazards Precaution

This equipment is intended to be used in a restricted access location, like a computer room. Only allow access to SERVICE PERSONS or users who have been instructed about the metal chassis of the equipment, which may have hazardous energy that service persons must pay attention or take special protection before touching it. Further, the access is through the use of a key or security identity system. Only the authorized and well trained personnel can access the restricted access location.

Installation and Operation

- Install the rack cabinet and the associated equipment at a site where the ambient temperature (special room cooling equipment may be required) stays lower than 35°C.
- Install the power source socket outlet near the enclosure where it is easily accessible and ground the rack cabinet.
- Secure airflow clearance inside and around the rack cabinet.
    - Secure an 18 to 20 cm clearance on the rear side.
    - Do not cover the enclosure openings.
    - Route the cables inside the rack cabinet.
    - Do not leave drive bays empty as it will affect airflow efficiency.
- Secure each enclosure module using its retention screws.
- Place power cords and other cables away from foot traffic. Do not place items on top of power cords and ensure they do not rest against data cables.
- Install all modules to the enclosure before turning on the system.
- Ensure that the correct power range is tested before turning on.
- DO NOT remove the covers or replaceable modules if they are not faulty.
- If the system is not used for a long period of time, disconnect it from the power outlet to avoid transient over-voltage.
- For power source redundancy, ensure that the two PSUs are plugged into two different power sources (i.e. different circuit breakers).

Service and Maintenance

- Keep the faulty module in place until you have a replacement unit; an empty module greatly affects the airflow efficiency within the enclosure.
- During service operation, place the enclosure on a soft and clean surface to prevent exterior damage. Do not place tools or other items on top.
- When transporting the enclosure, repackage all disk drives separately in the original package foam blocks. Replaceable modules can stay in the enclosure is you are using the original packaging; if not, repackage them separately as well.

- Disconnect the power cords before servicing or cleaning the enclosure.
- Use a slightly moistened paper sheet or cloth for cleaning. Avoid using liquid or sprayed detergent.
- When replacing components, insert them as gently as possible while assuring full engagement. Vibration and shock can easily damage hard drives.
- Only qualified service personnel should open the enclosure.
- Contact service personnel if any of the following situations occurs:
    - The power cord or plug is damaged.
    - The enclosure has been exposed to moisture.
    - The system has not been working properly.
    - The enclosure was dropped against a hard surface.
    - The enclosure shows obvious signs of breakage.
- To move the enclosure, more than one person might be necessary due to its weight. Drives should be removed from the enclosure beforehand.
- If there are any removal/insert/change of type of host board, the system will reset to default system and NAS settings to prevent previous settings from creating unexpected behavior with the new hardware change. Therefore, please export the NVRAM before making any changes.

Important Notice

The use ofc PAC Storage certified components is strongly recommended to ensure compatibility, quality, and normal operation with your PAC Storage products. Contact your distributor for a list of PAC Storage certified components (e.g. SFP, SFP+, HBA Card, iSCSI cable, FC cable, memory module, etc.).

ESD Precautions

- Handle the modules by their retention screws, ejector levers, or the module's metal frame / faceplate only. Avoid touching the PCB boards or connector pins.
- Use a grounded wrist strap and an anti-static work pad to discharge static electricity when installing or operating the enclosure.
- Avoid dust, debris, carpets, plastic, vinyl, and Styrofoam in your work area.
- Do not remove any module or component from its anti-static bag before installation takes place.
- Drives must not be stacked on top of each other without their protective drive trays. Even when drives are fixed in the drive trays, contacting the exposed PCB or rear-side interface may damage the drives.

About this Manual

The manual introduces hardware components of the PAC Storage PS Scale-Out NAS Series storage system and expansion enclosures. It also describes how to install, monitor, and maintain them.

- For non-serviceable components, contact our support site.
- PAC Management Software: Consult the PAC Management Software for Management Interface User Manual on the CD-ROM.

Revision History

Version	Date	Description
1.0	February 2020	Initial release

Hardware Specifications

Specification Summary

Form factor (per Node)	2U 25-bay PS 6325 3U 16-bay PS 6316/6416 4U 24-bay PS 6324/6424 4U 60-bay PS 6360/6460
CPU (per Node)	**PS 6300 Series:** - Intel® Xeon® D – 8 Core **PS 6400 Series:** - Intel® Xeon® D – 12 Core
Node	Single node, except for 4U 60-bay which has both single and dual node
Number of Nodes	1 to 144
Management Port (per Node)	1x 1GbE port (RJ-45)
Onboard SAS Expansion Ports (per Node)	2x 12Gb/s SAS wide ports
Cache memory (per Node)	Default DDR4 64GB; Expandable to 128GB or 256GB
Cache Backup Technique	Supercapacitor + Flash module
Support Drives	2U25 supports 2.5” SAS/SATA SSD; The other form factors support 3.5” nearline SAS/SATA HDD
Expansion Enclosure Supported Models	PS25FJ2 PS16J3 PS60J4
Maximum Number of Drives (per Node)	**PS 6425** Per system: 25 Via expansion enclosure: 100 **PS 6316/6416** Per system: 16 Via expansion enclosure: 76 **PS 6324/6424** Per system: 24 Via expansion enclosure: 84 **PS 6360/6460** Per system: 60 Via expansion enclosure: 120
Network Types	**Front-end** 10/25/40GbE optical **Internal** 10/25/40GbE optical
Network Types Combinations	Combination 1: Onboard 2 x 10GbE (Front-end) + Onboard 2 x 10GbE (Internal) Combination 2: Onboard 4 x 10GbE (Front-end) + Host Board 2 x 25GbE (Internal) Combination 3: Onboard 4 x 10GbE (Front-end) + Host Board 2 x 40GbE (Internal) Combination 4: Host Board 2 x 25GbE (Front-end) + Host Board 2 x 25GbE (Internal) Combination 5: Host Board 2 x 40GbE (Front-end) + Host Board 2 x 40GbE (Internal)
Green Design	- 80 PLUS-certified power supplies delivering more than 80% energy efficiency

	- Intelligent multi-level drive spin-down

(See next page)

Specification Summary (cont.)

Power	Power supplies: 4U60-bay: 1600W (80 Plus Platinum); other form factors: 530W (80 Plus Bronze) AC voltage: 100-127VAC @ 13.8A to 200-240VAC @ 9.6A with PFC (auto-switching) Frequency: 47-63Hz
Environmental	**Temperature:** - Operating: 5°C to 35°C - Non-operating: -40°C to 60°C **Altitude:** - Operating: sea level to 3048m (10,000ft) - Non-operating: sea level to 12,192m (40,000ft) **Relative Humidity:** - Operating: 5 to 90% - Non-operating: uncontrolled to 95%
Regulatory	Safety: UL, BSMI, CB Electromagnetic compatibility: CE, BSMI, FCC
Weight (without drives)	**PS 6316/6416** 15.79kg/34.8lbs **PS 6324/6424** 21.32kg/47.02lbs
Dimensions	**PS 6425** 447mm (W) x 88mm (H) x 500mm (D) **PS 6316/6416** 447mm (W) x 130mm (H) x 500mm (D) **PS 6324/6424** 447mm (W) x 175mm (H) x 500mm (D) **PS 6360/6460** 448mm (W) x 176mm (H) x 840mm (D)
Package Dimensions	**PS 6425** 780mm (W) x 340mm (H) x 588mm (D) **PS 6316/6416** 780mm (W) x 423mm (H) x 588mm (D) **PS 6324/6424** 780mm (W) x 465mm (H) x 588mm (D) **PS 6360/6460** 620mm (W) x 460mm (H) x 1140mm (D)

NOTE: For the expansion enclosures, refer to the data sheet or download it from our official website.

Package Contents

Check the Unpacking List for the complete list of contents and exact quantity of the components of your system.

NOTE: The contents and quantity may vary depending on the system model and order requests.

System Package

Unpacking list and China RoHS compliance documentation

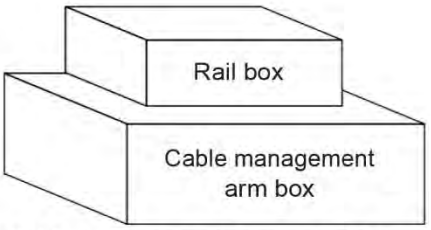

Cable management arm and rail boxes

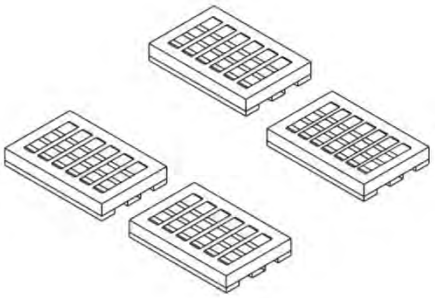

Tray EPE

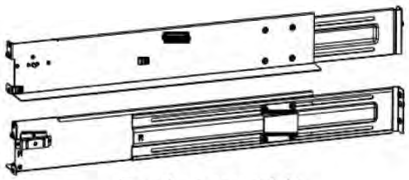

Rackmount kit

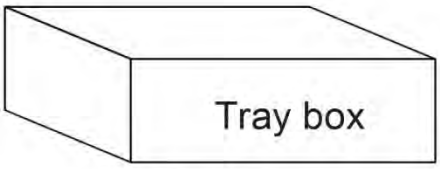

Tray box

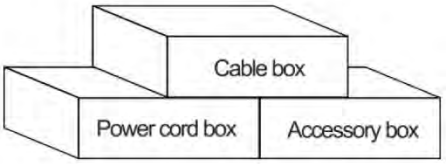

Powercord, cable, and accessory boxes

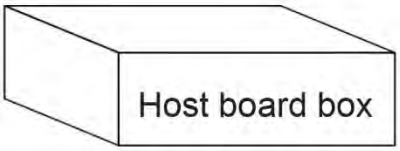

Host board box (optional)

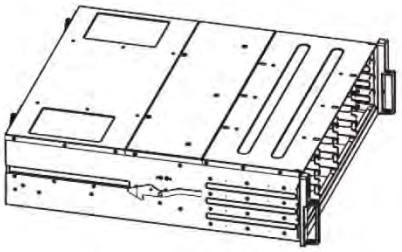

Enclosure chassis

Tray EPE Content (PS 6316/6324/6416/6424/6425)

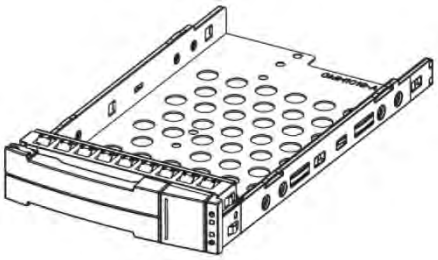

3.5" HDD Tray

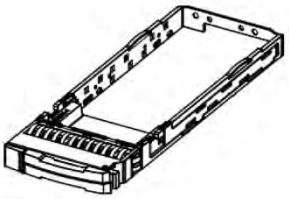

2.5" Screwless SSD Tray

Tray Box Content (PS 6360/6460)

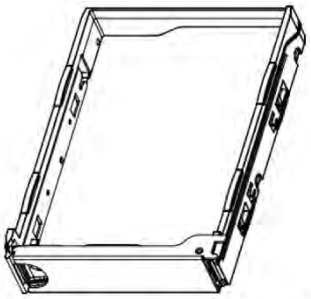

3.5" Screwless HDD Tray

Host Board Box Content (optional)

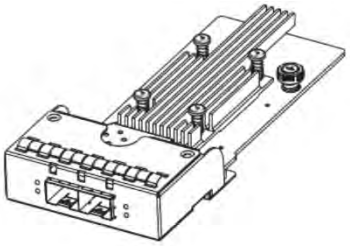

Host board (optional)

Cable Management Arm (CMA) and Rail Boxes (for PS 6360/6460)

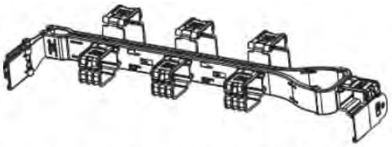

Cable management arm

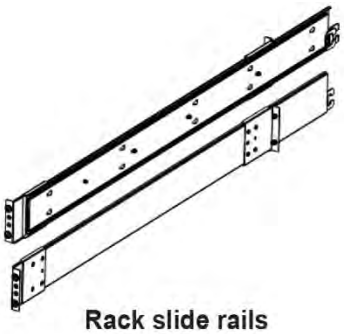

Rack slide rails
(left and right)

Mounting enclosure screws,
washers, and nuts

Power Cord, Cable, and Accessory Boxes

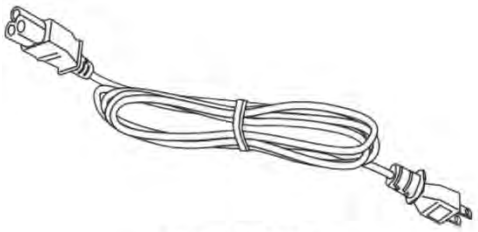

Power cord

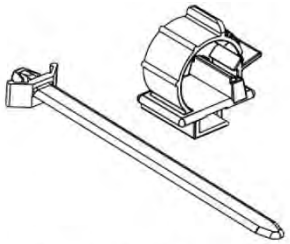

Power cord clamp set

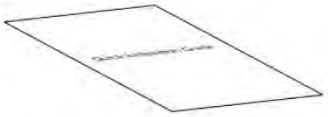

Quick installation guide

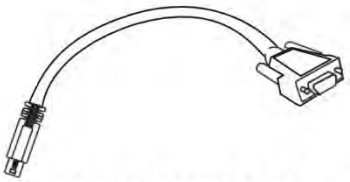

RS-232C serial cable

(mini USB to DB9)

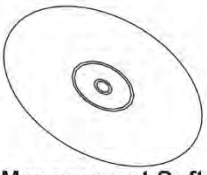

PAC Management Software CD

Mounting enclosure screws and nuts
(for PS 6316/6324/6424/6425)

Slide rail kit installation guide
(for PS 6360/6460)

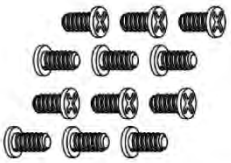

3.5 inch HDD screws
(for PS 6316/6324/6416/6424)

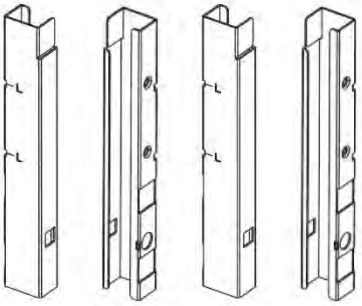

Adjuster pillars
(for PS 6360/6460)

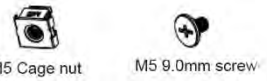

Screws and cage nuts for pillars
(for PS 6360/6460)

Pre-Installed Components in the Enclosure Chassis

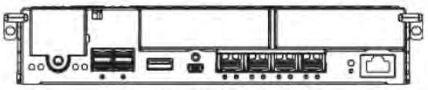

Controller Module
(for PS 6316/6324/6416/6424/6425)

Controller Module
(for PS 6360/6460)

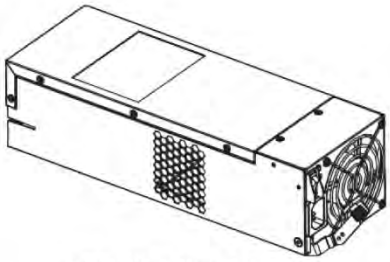

PSU/Cooling Module
for (PS 6316/6324/6416/6424/6425)

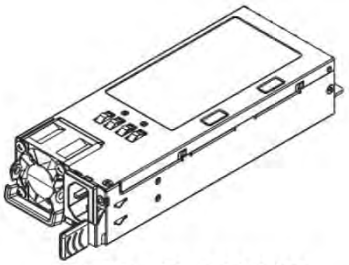

PSU (for PS 6360/6460

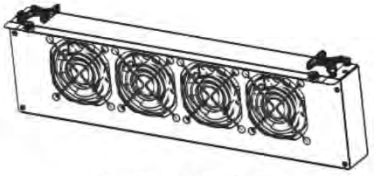

Cooling Module
for (PS 6360/6460)

Rackmount Kit

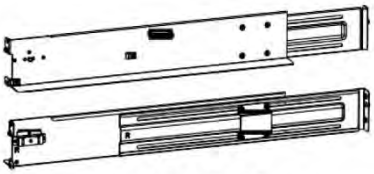

Slide rail kit
(default for PS 6316/6324/6416/6424/6425)

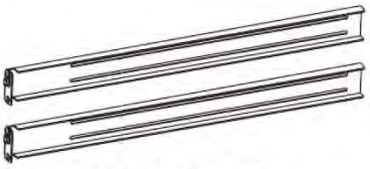

Rack ear mount kit
(optional for PS 6316/6324/6416/6424/6425)

NOTE: See section **Installing the Rackmount Kit** for the types of mounting kit and the exact package contents.

Product Introduction

This chapter introduces the look and feel of the PS Scale-Out NAS Series system, the features, and the supported components.

Overview

This manual introduces the PS Scale-Out NAS Series of systems that support 3Gb/s, 6Gb/s, 12Gb/s SAS, Nearline SAS, and SATA hard drives. These systems are designed to utilize 2.5” or 3.5” hard drives. Drive capacity can be expanded by attaching expansion hard drive enclosures.

2U Systems

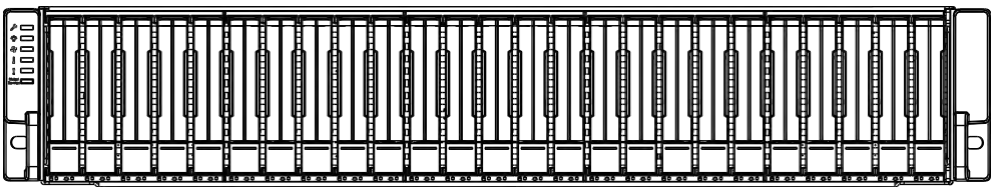

PS Scale-Out NAS 6425

3U Systems

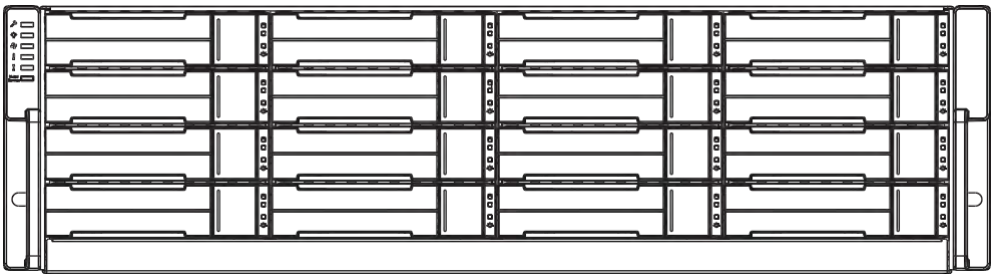

PS Scale-Out NAS 6316/6416

4U Systems

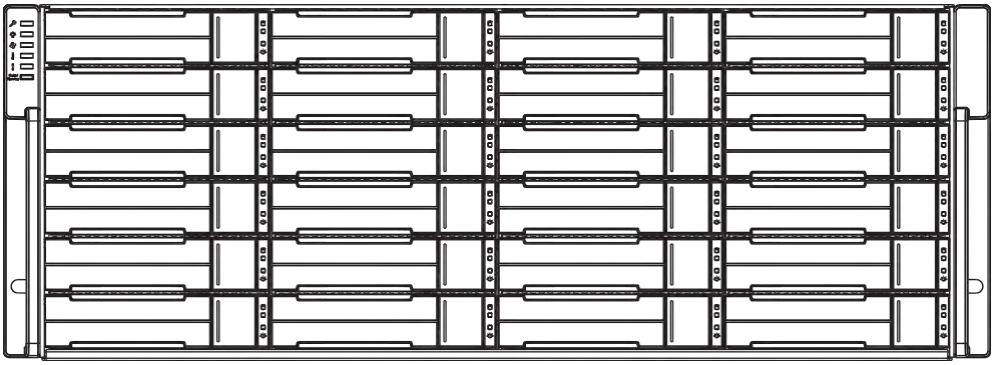

PS Scale-Out NAS 6324/6424

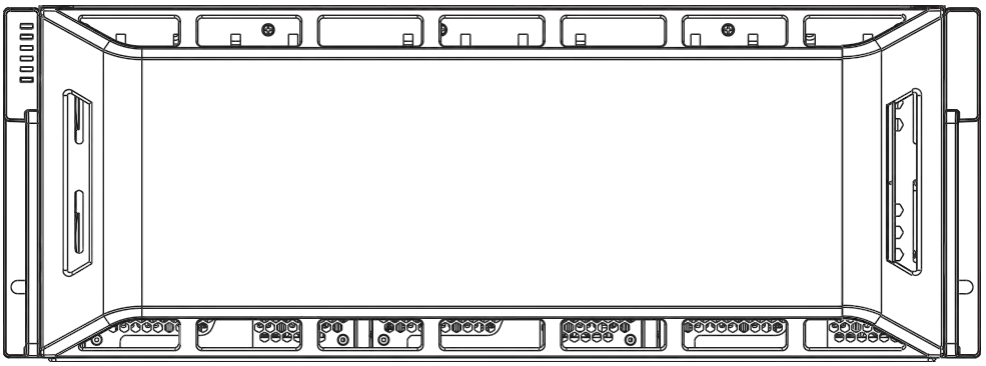

PS Scale-Out NAS 6360/6460

Major Components

NOTE: Upon receiving the system, check the package contents and compare them to the **Unpacking List.** If one or more of the modules are missing, contact your system vendor.

Controller and Interface

Each system has controllers, and each controller comes with pre-installed DIMM modules. It also has a Cache Backup Module (CBM), a module that has a supercapacitor and a Flash Backup Module (FBM). With the CBM, the cached data is quickly distributed to the FBM to save the data permanently with the support of the supercapacitor if power outage occurs. With the supercapacitor's fast-charging feature, it can distribute a fair supply of power to the controller, so the controller can save cache data to the FBM immediately and permanently.

Also, the embedded firmware features earth-friendly and smart algorithms that you can use to customize your system's hardware settings such as power-saving modes, variable fan speeds, and exiled drive handling.

Expansion Controller and Interface

The expansion enclosure is managed by expander controllers that distribute data flow to individual disk drives and report operating status through a proprietary enclosure service via in-band protocols. The enclosure, along with other expansion systems, connects to a SAN system and serves as a building block of a scalable configuration.

For supported protocols, the firmware supports communications with enclosure devices, SAS/SATA disk drives, and SAN system that features SAS expansion ports.

For physical connection, the SAS interface provides easy cabling routes via mini-SAS connectors. With the backplane-adapting SAS or SATA drives, the system can support enterprise-class SAS, Nearline SAS, and cost-effective SATA-II or SATA-III hard drives. This connection is ideal for adding large capacity storages to a storage pool.

Power Supply Unit/Cooling Module

There are two PSUs in the system. Each PSU is hot-swappable and is built with a fan to protect the system from overheating while providing constant power. The modular architecture of the system and easy accessibility to all major components provide you an easy maintenance.

For the PS 6360/6460 systems, there are two types of cooling modules:

- The cooling type located at the center of the enclosure, which independently ventilates the system and keeps the operating temperatures under optimal condition.
- The cooling type which is built with the PSU to help with the PSU's temperature.

Chassis

This section describes the front and rear panels of the PS Scale-Out NAS Series' rugged storage chassis. The chassis are designed to allow installation to the rack or a cabinet.

Front Panel

2U Systems

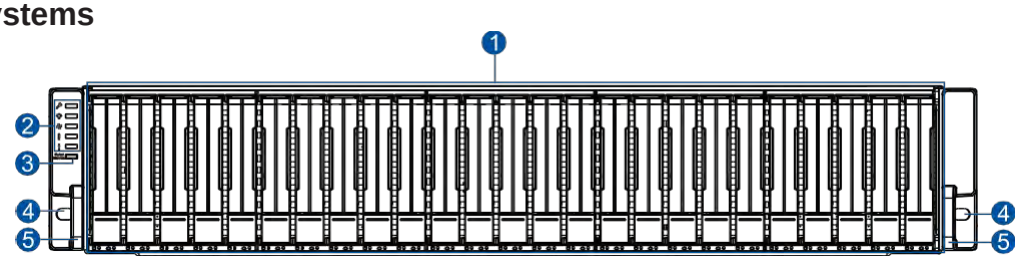

PS Scale-Out NAS 6425

3U Systems

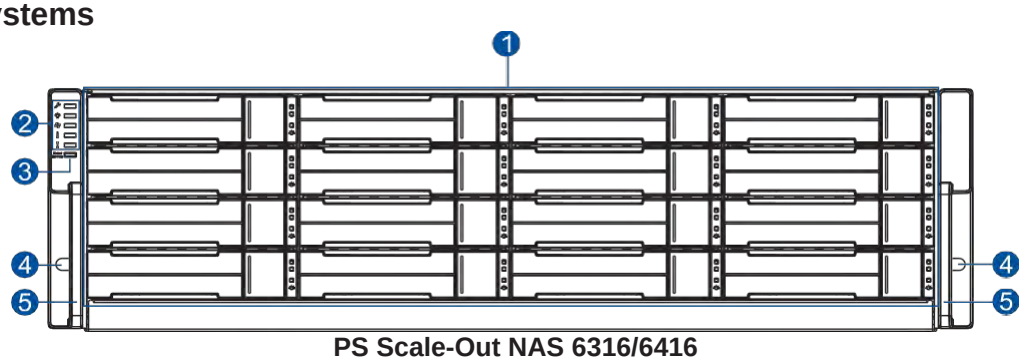

PS Scale-Out NAS 6316/6416

4U Systems

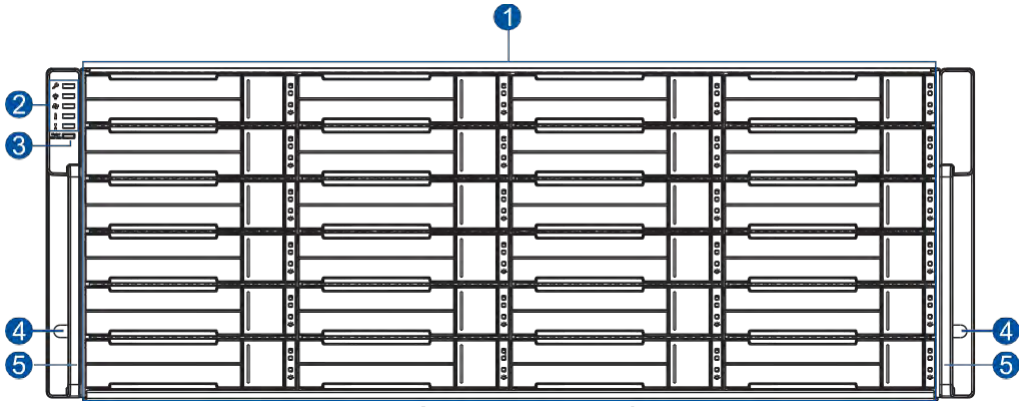

PS Scale-Out NAS 6324/6424

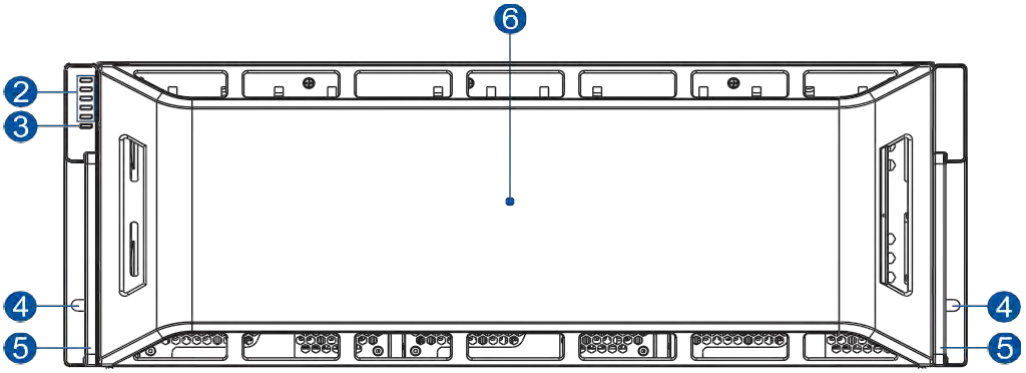

PS Scale-Out NAS 6360/6460

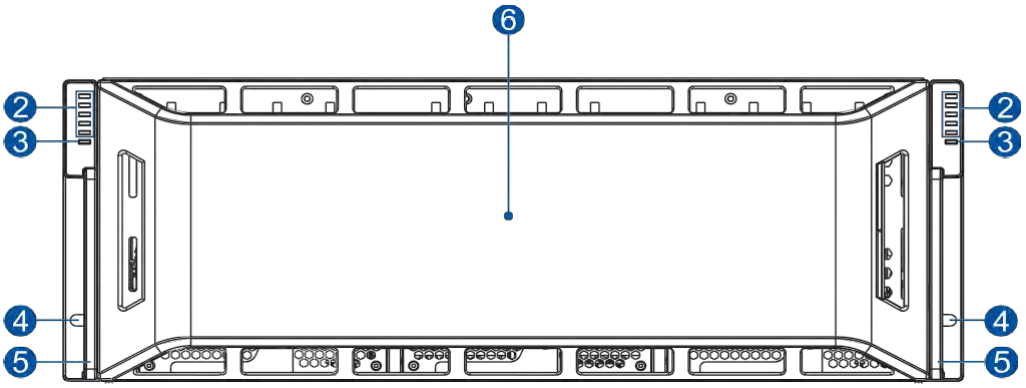

PS Scale-Out NAS 6360/6460 (Dual Node)

Number	Part	Description
1	Drive Trays	Each drive tray is hot-swappable and holds a 2.5" or 3.5" hard drive.
2	LED Panel	LED panel has service, power, cooling module, temperature, and system fault LEDs.
3	Mute/Service Button	This button comprises of two functions: • press it for less than 5 seconds, Service LED will become steady white and the system will export a memory dump. • press it for 6~10 seconds, Service LED will become blinking white and the node will become the master of the cluster.
4	Rackmount Holes	These holes secure the enclosure to the rackmount kit with the mounting screws.
5	Handles	These handles allow you to push/pull the enclosure to/from the cabinet installed in the rackmount kit.
6	System Cover	This cover hides the components of the system.

Rear Panel

Single Node Systems

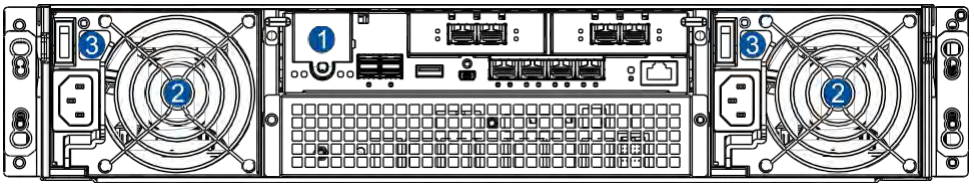

2U System (PS Scale-Out NAS 6425)

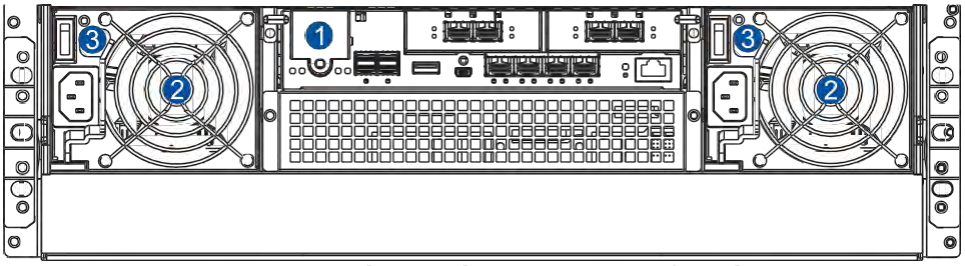

3U System (PS Scale-Out NAS 6316/6416)

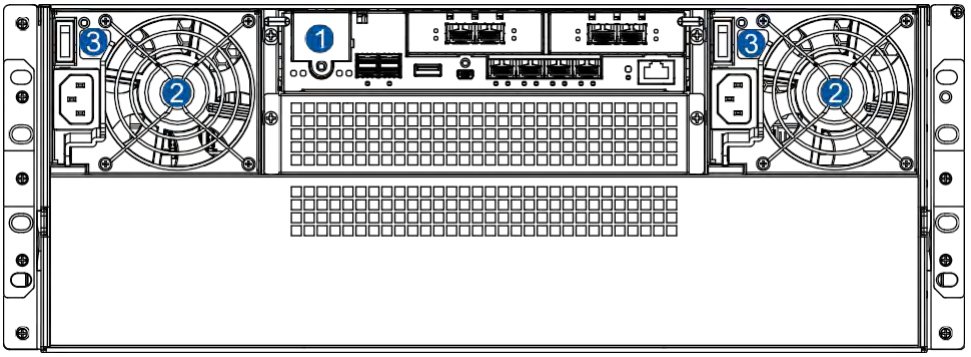

4U System (PS Scale-Out NAS 6324/6424)

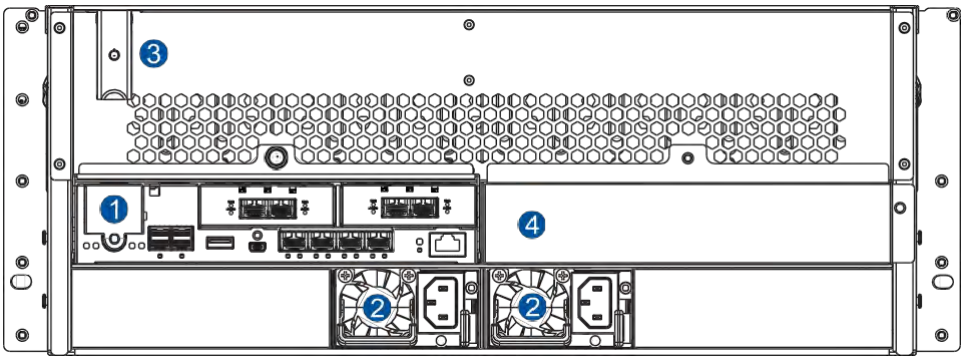

4U System (PS Scale-Out NAS 6360/6460)

Dual Node Systems

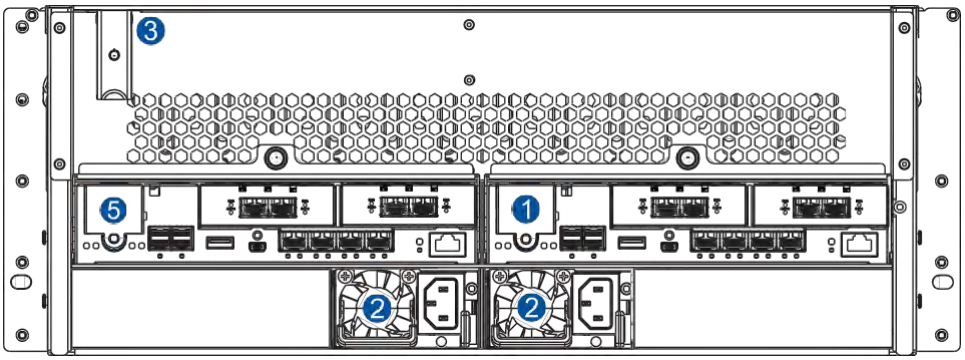

4U System (PS Scale-Out NAS 6360/6460)

Number	Part	Description
1	Controller for Node 1	This module is the server component of the system that contains the main circuit board with various interfaces.
2	PSU/Cooling Module	These hot-swappable PSUs provide power to the storage system and each PSU has a cooling module.
3	Power Button	These buttons allow you to turn ON/OFF your storage system.
4	Dummy Cover	For PS 6360/6460 Single Node only. Do not remove it.
5	Controller for Node 2	This module is the server component of the system that contains the main circuit board with various interfaces.

WARNING!

- DO NOT remove the redundant components.
- DO NOT replace the redundant components without a replacement on hand.

Internal Backplane

The internal backplane is a circuit board that separates the front and rear parts of the chassis. This board provides logic level signals and low voltage power paths. The thermal sensors and I^2C devices are embedded to detect system temperatures and PSU operating status. This board is comprised of non-user serviceable components.

WARNING!

- Accessing the backplane board may lead to serious damage to the system.
- Physical contact with the backplane board may cause electrocution.

Front Panel Components

This section describes the front panel components of the PS Scale-Out NAS Series systems.

LEDs and Button Panel

The LEDs on this panel allow you to know your system's current status when turned on, while the button has specific functions that you can set.

Single Node Systems

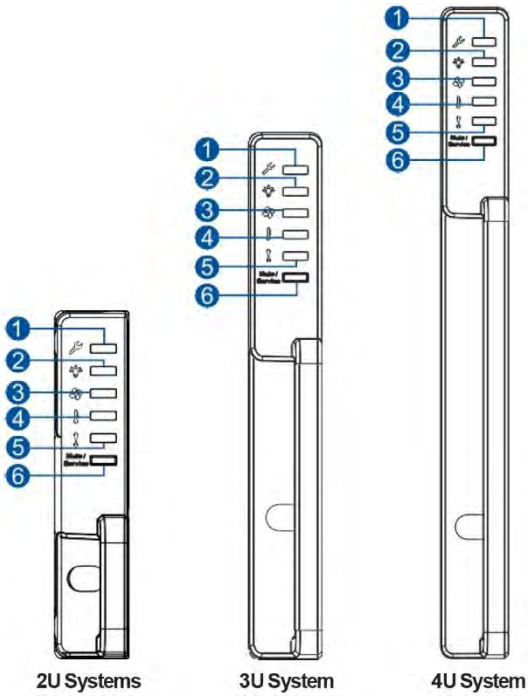

Dual Node Systems

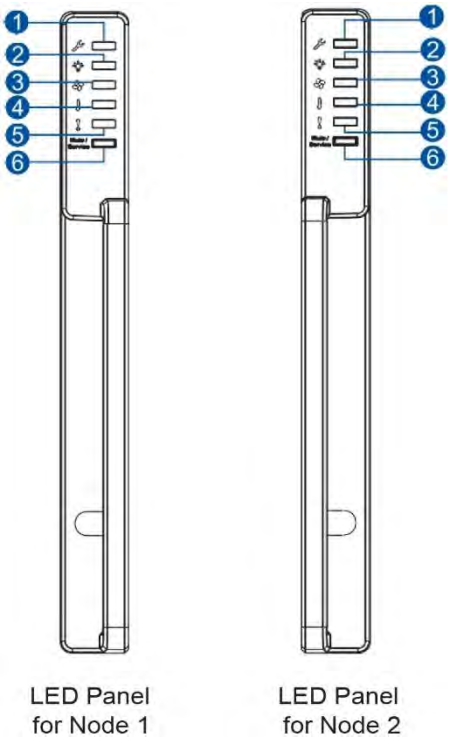

Number	Part	Description
1	Service LED	This LED provides the status when the system requires service or currently in service.
2	Power LED	This LED provides the status of the system's power.
3	Cooling Module LED	This LED provides the cooling module's status.
4	Temperature LED	This LED provides the system's temperature status.
5	System Fault LED	This LED provides the system's operation status.
6	Mute/Service Button	This button comprises of two functions: • press it for less than 5 seconds, Service LED will become steady white and the system will export a memory dump; • press it for 6~10 seconds, Service LED will become blinking white and the node will become the master.

NOTE: For more details regarding the LEDs and their respective status, refer to **LEDs**.

WARNING! If critical faults are indicated on the LED panel, verify the cause of the problem as soon as possible and contact your system vendor for a module replacement.

Drive Tray Bezel

The drive tray bezel is designed to accommodate both SAS and SATA-interfaced hard disk drives. Get familiarized of the components of your system's drive tray bezel.

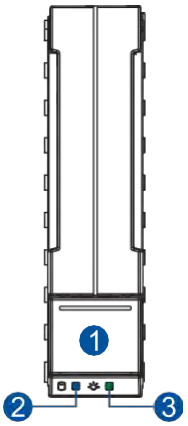

PS Scale-Out NAS 6425

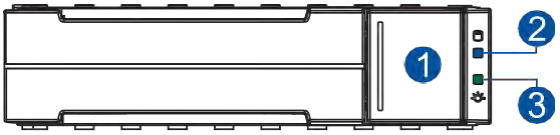

PS Scale-Out NAS 6316/6324/6416/6424

Number	Part	Description
1	Release Button	This button unlocks the drive tray from the drive tray slot.
2	Drive Busy LED	This LED provides the status of the hard disk drive.
3	Power Status LED	This LED provides the power status of the hard disk drive.

WARNING! Be careful not to drop or put heavy objects on the drive tray, as these may cause it to bend or deform the drive tray's structure. If the drive tray is deformed, it may not fit into the system's drive bay.

Rear Panel Components

This section describes the rear panel components of the PS Scale-Out NAS Series systems.

Controller Module Interface

The I/O interfaces of the controller module allow you to connect to other devices and the LEDs allow you to know the status of your controller.

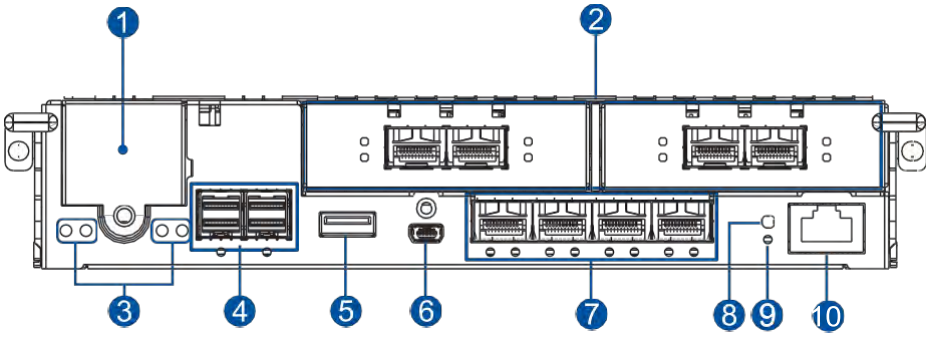

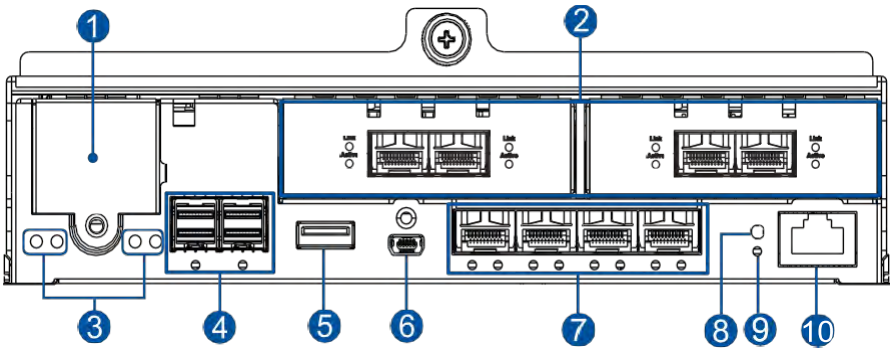

Number	Part	Number	Part
1	CBM (Cache Backup Module)	6	Mini USB Connector (Console)
2	Host Board Ports (Optional)	7	Onboard Host Ports
3	Controller Status LEDs	8	Restore Default Button
4	SAS Expansion Ports	9	Restore Default LED
5	USB 3.0 Port	10	Ethernet Management Port

WARNING! The PS Scale-Out NAS controller module is built of sensitive and non-replaceable components. You can only replace the controller module when you already have the replacement. Unnecessary tampering may damage the controller.

NOTES:

- The host boards are add-on components. Always install a host board at the left slot first.
- The Ethernet management port supports 100Mb/s and 1Gb/s speeds.
- For more information about the CBM, see section **Supercapacitor and Flash Backup Module**.

Controller Module Interfaces of the JBOD Models

The controller module of a JBOD system contains a circuit board within a metal canister, integrated with the hot-swap docking connectors at the backend. Two SAS wide ports on the interface faceplate connect to a managing CS system or other expansion systems.

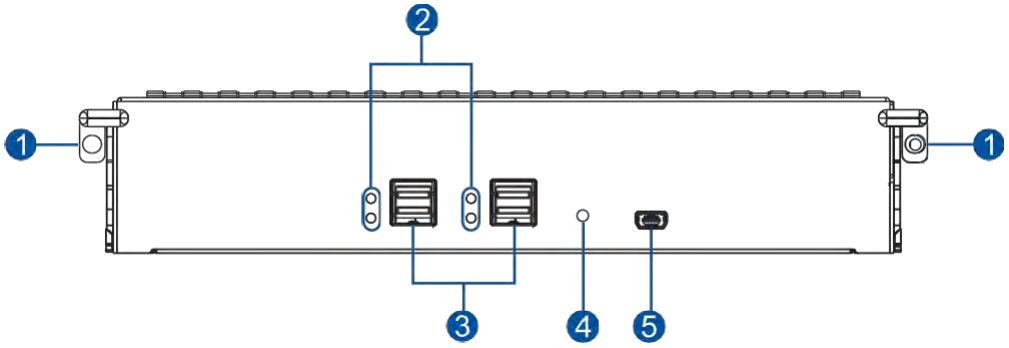

PS16J3

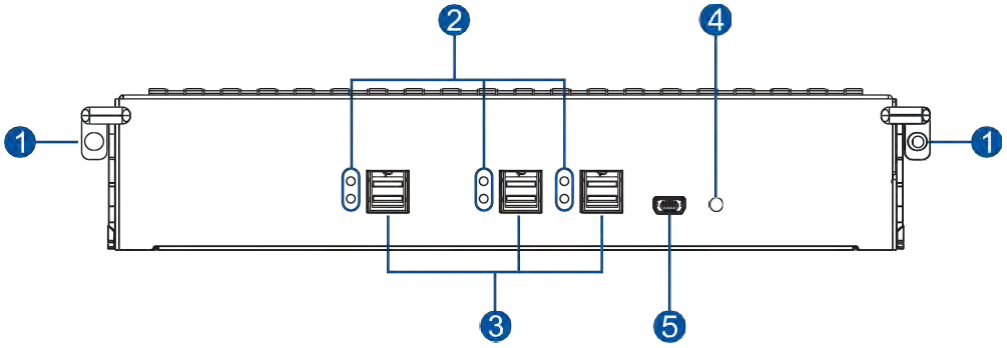

PS60J4

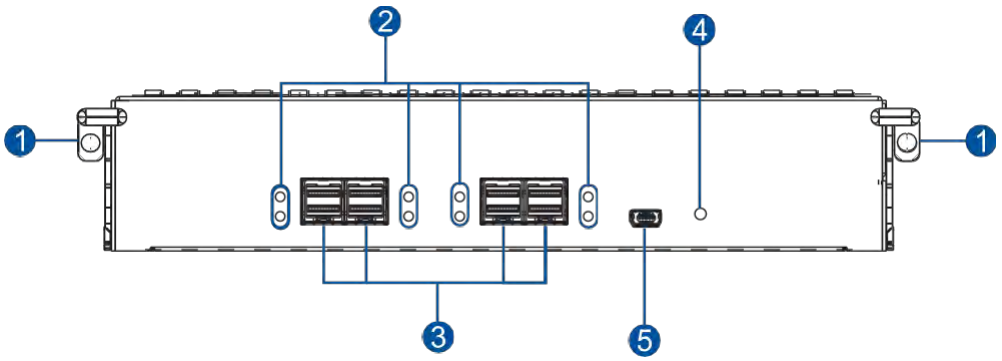

PS25FJ2

Number	Part
1	Extraction Levers/Screw Holes
2	SAS Expansion Port Status LEDs
3	SAS Expansion Ports
4	Controller Status LED
5	Mini USB Service Port

WARNING! You can only remove the controller when you already have the replacement. The JBOD (expansion chassis) controller is built of sensitive components. Unnecessary tampering may damage the controller.

PSUs and Cooling Modules

The PS Scale-Out NAS Series system has two redundant, hot-swappable PSUs that provide power and built with a cooling fan that helps with the airflow, providing efficient ventilation.

PSU/Cooling Module (for PS 6316/6324/6416/6424/6425)

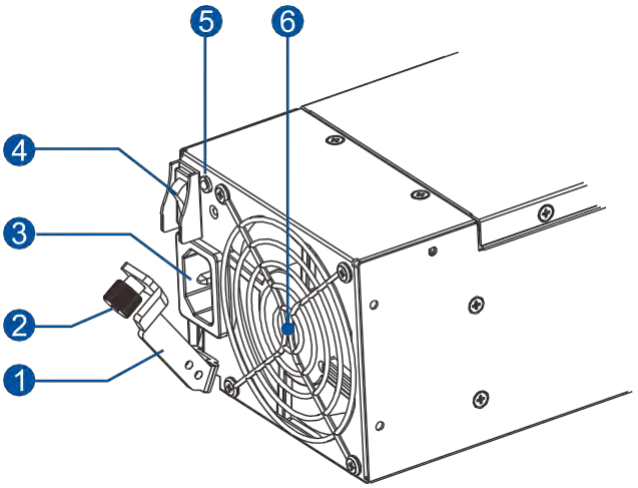

Number	Part
1	Extraction Lever
2	Retention Screw
3	Power Socket
4	Power Button
5	PSU Status LED
6	Fan

PSU (for PS 6360/6460)

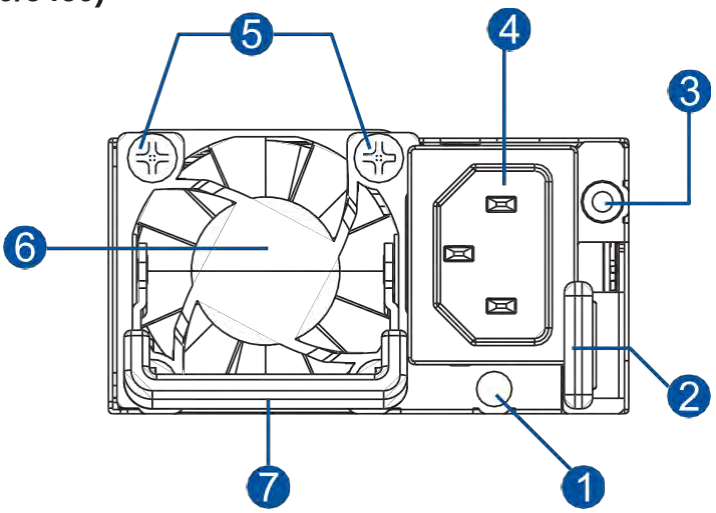

Number	Part
1	Mounting Hole for the Cable Tie
2	Retention Lever
3	PSU Status LED
4	Power Socket
5	Retention Screw
6	Fan
7	Extraction Handle

Cooling Module (for PS 6360/6460)

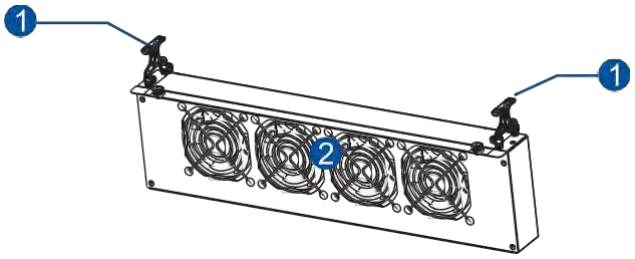

Number	Part
1	Extraction Handles
2	Cooling Fans

When the cooling modules operate under normal conditions, the cooling fans run at a low speed. The cooling fans raise their rotation speed to increase the airflow under the following conditions:

- Component failure: if the cooling module, PSU, or a temperature sensor failed.
- Elevated temperature: if the temperature breaches the upper threshold set for any of the interior temperature sensors.
- During the initialization stage, the cooling fans operate at a high speed. The speed is lowered when the initialization is completed and no errors are detected.

NOTES:

- The PSU/Cooling Modules have specific installation orientations for left and right slots. Refer to the label at the back of the expansion.
- There are two upper temperature thresholds: one for event notification and the other for triggering high fan rotation speed. You can change the preset values for event notification using the firmware-embedded configuration utility. Refer to the firmware operation manual for details.

WARNING!

- If any of the LEDs light up red, contact your local vendor to request a replacement immediately.
- When removing the system PSU/Cooling Module, pull the module out about 3 inches then wait for at least 10 seconds before removing the whole module from the enclosure.
- DO NOT run the system with a faulty PSU/Cooling Module(s) as it may cause a disruption of the airflow resulting in overheating.

CAUTION! Keep your body away from the moving parts of the system.

Supercapacitor and Flash Backup Module (FBM)

The PS Scale-Out NAS Series system has a Cache Backup Module (CBM), which is comprised of a supercapacitor and Flash Backup Module (FBM), installed in the controller. The supercapacitor provides power, allowing the system to store cached data to the Flash Backup Module permanently in case of power interruption or outage.

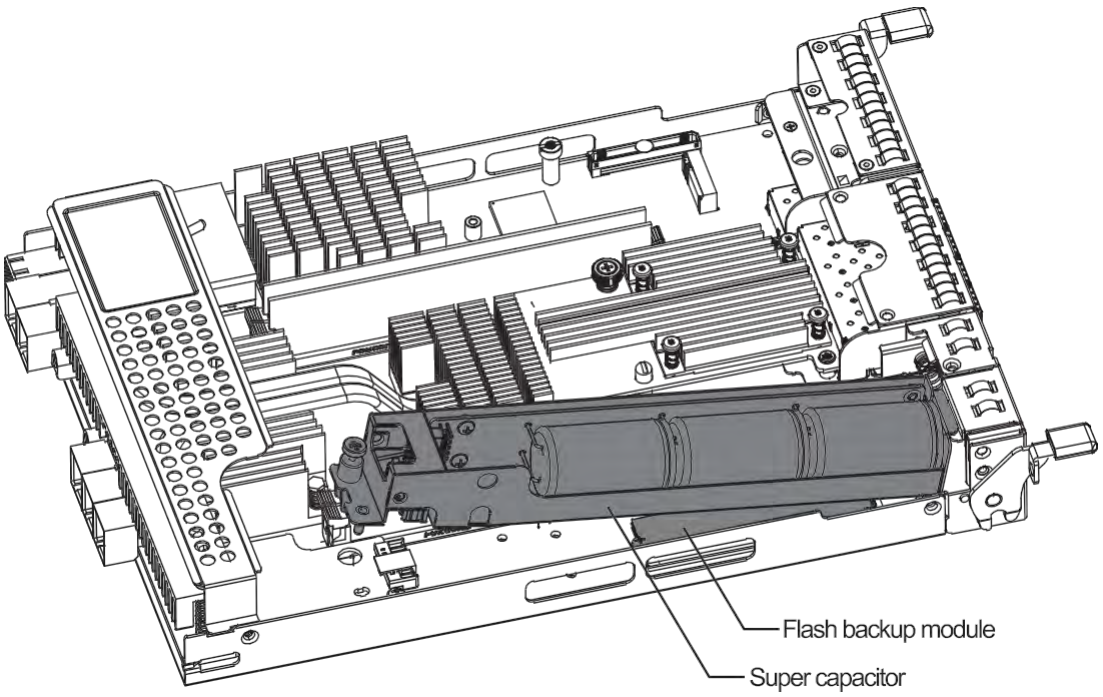

NOTES:

- The supercapacitor is partially charged when shipped. When you turn the system ON, the supercapacitor will charge to its full capacity for a few minutes. If it is not charging, there may be a problem. Contact your system vendor immediately. You can also check the status of the supercapacitor via the PAC Management Software or the firmware. Refer to the manuals for more details.
- The Flash Backup Module is located under the supercapacitor.

System Monitoring Features

This section describes the different types of system monitoring features that provide the operating status of each component.

Expansion Enclosure Support

Monitoring System

A managing PS Scale-Out NAS system is aware of the status of connected expansion system's components such as:

- Expander controller (presence, voltage, thermal readings)
- PSU/Cooling Module
- Enclosure thermal sensor
- Service (the Service LED signals the specific enclosure)
- Hard disk drives

Cooling Module Speed Adjustment

If any of the detected temperature readings breaches the temperature threshold, the firmware running on the managing PS Scale-Out NAS system automatically increases the rotation speed of all cooling fans.

Expansion Enclosure Status Monitoring

When connecting with expansion systems (JBOD), you can acquire the component status with other enclosures via a proprietary enclosure monitoring service using the in-band connectivity. No additional management connection is required.

I^2C Bus

The detection circuitry and temperature sensors are interfaced via a non-user serviceable I^2C bus. When the expansion systems are connected to PS Scale-Out NAS controllers, the component status is reported through in-band protocols over expansion links, which is managed by a proprietary enclosure service.

Firmware (FW) and PAC Management Software

- **Firmware (FW):** the firmware is preloaded and is used to configure the system. Access the FW via a terminal emulation program running on a management computer connected to the system's serial port.
- **PAC Management Software:** The PAC Management Software for the PS Scale-Out NAS is another browser-based graphical user interface (GUI) software that you can install into a local or remote computer and access via the network. The managing system communicates with the array via connection of the existing host links or the Ethernet link to the array's Ethernet port.

Audible Alarms

The system comes with audible alarms that are triggered when certain active components fail or when specific controller or system thresholds exceed. Whenever you hear an audible alarm, you must determine the cause and solve the problem immediately.

Event notification messages indicate the completion or status of array configuration tasks and are always accompanied by two or three successive and prolonged beeps. You can turn off the alarm using the mute button on the front panel.

WARNING! Failure to respond when an audible alarm is set off can lead to permanent damage to the system. When you hear an audible alarm, solve the problem immediately.

Hot-swappable Components

The system has a number of hot-swappable parts that you can change while the system is still online without affecting its operational integrity.

These hot-swappable components are user-maintained:

- Controller Module
- PSU/Cooling Module
- Hard disk drive

IMPORTANT! Only remove these hot-swappable components when replacement is needed.

NOTE: A normal airflow ensures sufficient cooling of the system and this can only be attained when all components are properly installed. Remember to only remove the failed component if there is already a replacement. For more information on replacing hot-swappable components, see **System Maintenance**.

Hardware Installation

This chapter describes installing the modular components such as hard drives, cards, and other optional installation or connections such as expansions and rackmount.

Installation Prerequisites

Take note of the following installation prerequisites before you start with the installation:

- **Static-free installation environment**

  Install the system in a static-free environment to minimize the possibility of ESD (electrostatic discharge) damage.

- **Component check**

  Before the installation, ensure that you received all required components by verifying the package contents with the **Unpacking List** document. This document is included in the package. If there are items missing and/or damaged, contact your vendor for a replacement.

- **Hard drives**

  The SAS/SATA drives are purchased separately and must be available before the system installation.

- **Cables**

  All cables that connect the system to the hosts are purchased separately. Contact your vendor for the list of compatible cables.

- **Memory modules**

  If you want to change the pre-installed DIMM modules, ensure that they are compatible and purchased from a qualified vendor. Contact your vendor for the list of compatible DIMMs.

- **Rackmount equipment**

  See section for installing the rackmount kits.

IMPORTANT! Install the system first to the rack or cabinet before installing the hard drives into the system.

Ensure that you are familiar with the exact position of each plug-in module and interface connector. Also, ensure to handle the cables with care when connecting between systems installed in the rack with correct routing paths carefully planned. DO NOT bend or twist the cables as this may cause emission interference and accidental cable disconnection.

Installation Procedures

This section details the installation procedures of the system, its components, and connections between equipment. The installation procedures in this section are in order, so it is strongly recommended that you follow the said order to reduce the time consumed during installation and prevent installation mistakes, technical mishaps, or physical injuries.

Unpacking the System

When your system package has arrived, check and confirm if the contents of your package are complete by referring to the **Unpacking List** document, which is bundled with your package.

Accessory Box Contents

This box contains the following:

- Quick installation guide
- Support CD (PAC Management Software and manual)
- Screws
- Power cord clamp set
- Serial port cable

Pre-installed Components

Below are the components that are pre-installed in the system:

- Controllers
- LED front panels
- DIMM modules
- Cache Backup Module (CBM)
- PSUs including the cooling modules

Components that Need User Installation

You must do the following installation:

- Assembling of the system to the rack/cabinet
- Assembling the hard drives to the hard drive tray
- Installing the host boards (optional)
- Cabling in between systems

Installing the Rackmount Kit

This section details the overview of the rackmount kit, its assembly, and installation with the storage system.

IMPORTANT! Please contact our technical support team if you need further help installing your system/enclosure to the rack.

Preparing the User-Provided Tools

Before assembling the rackmount kit, you must prepare the following tools:

- Medium-sized Phillips screwdriver
- Small-sized flat blade screwdriver
- Anti-static wrist wrap
- Host link cables

Types of Rackmount Kit

There are three types of rackmount kits depending on the system:

- Rack ear mount kit (optional for PS 6316/6324/6416/6424/6425)
- Slide rail kit (default for PS 6316/6324/6416/6424/6425)
- Rackmount slide kit and adjuster pillars (for PS 6360/6460)

Rack Ear Mount Contents (Optional for PS 6316/6324/6416/6424/6425)

Check you rack ear mount kit for the following contents:

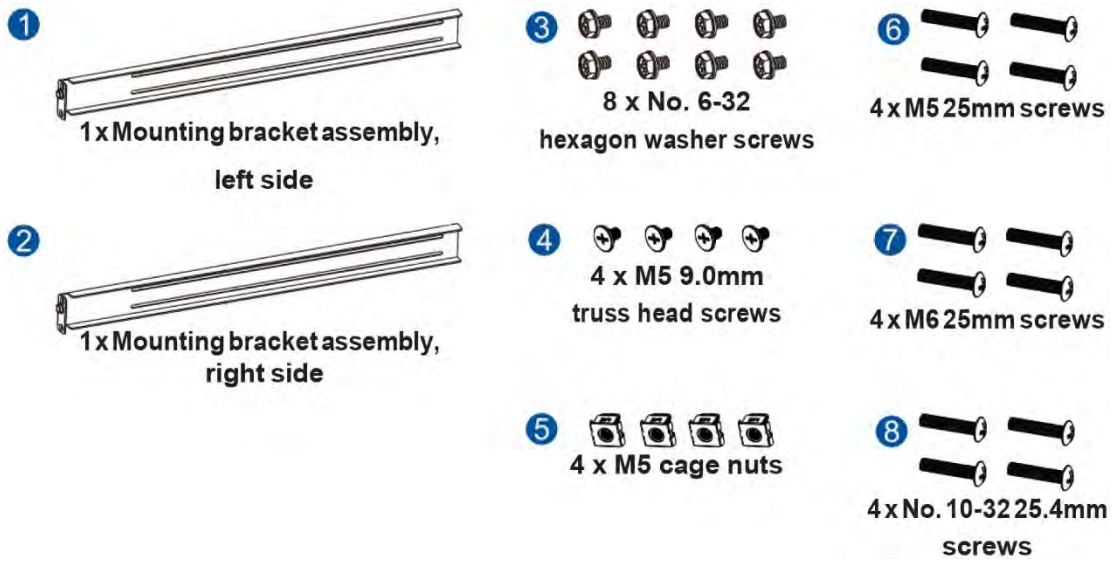

Assembling the Rack Ear Mount Kit

To assemble the rack ear mount kit:

1. Determine the position where the enclosure will be installed to the front and rear rack posts, then insert the cage nuts into the designated holes of the front rack posts.

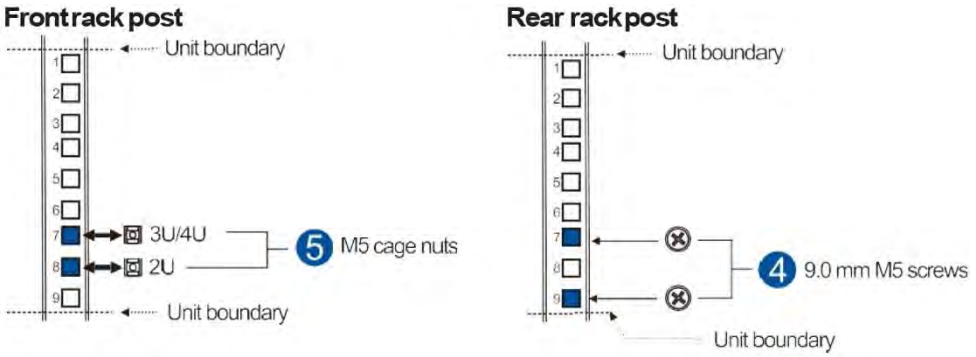

NOTE: If the rack does not require M5 cage nuts and has its own screw threads, use the M6 or No. 10-32 screws on the front posts.

2. Install the mounting brackets to rear rack posts using the M5 9.0mm truss head screws.

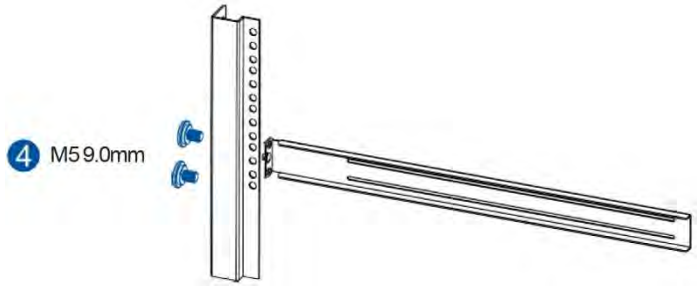

3. With the assistance of another person holding the enclosure at the installation height, secure the enclosure in place using two M5 25mm, M6 25mm, or no. 10-32 25.4mm screws at the front and eight no. 6-32 screws on the side panels, four on each side.

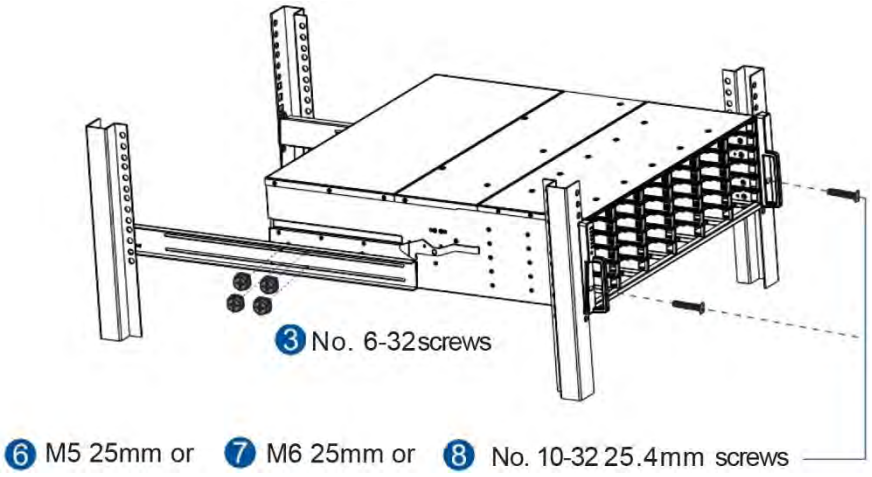

Slide Rail Kit Contents (by default for PS 6316/6324/6416/6424/6425)

Check your slide rail kit for the following contents.

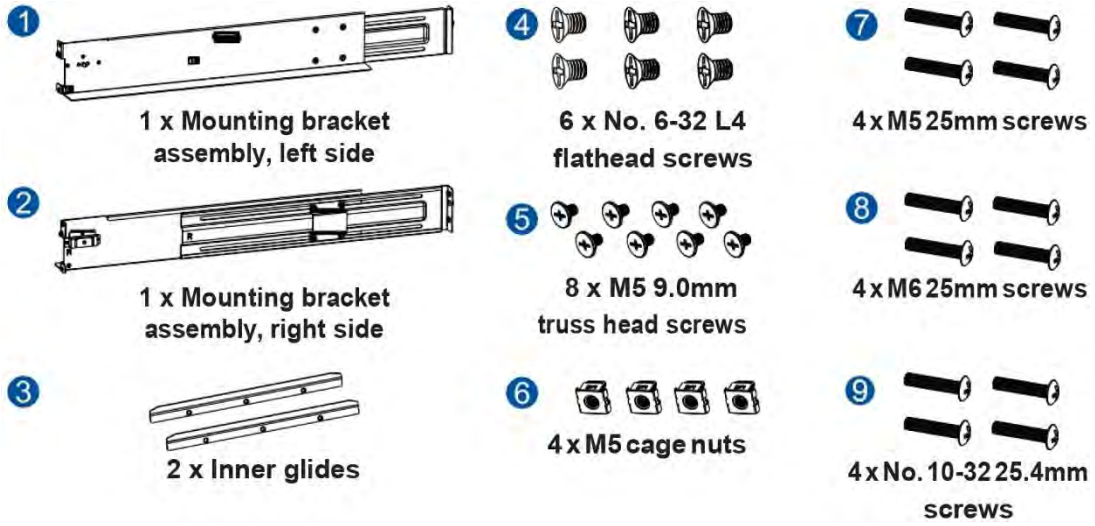

Assembling the Slide Rail Kit

To assemble the slide rail kit:

1. Determine the position where to install the enclosure to the front and rear rack posts, then insert the cage nuts into the designated holes of the front rack posts.

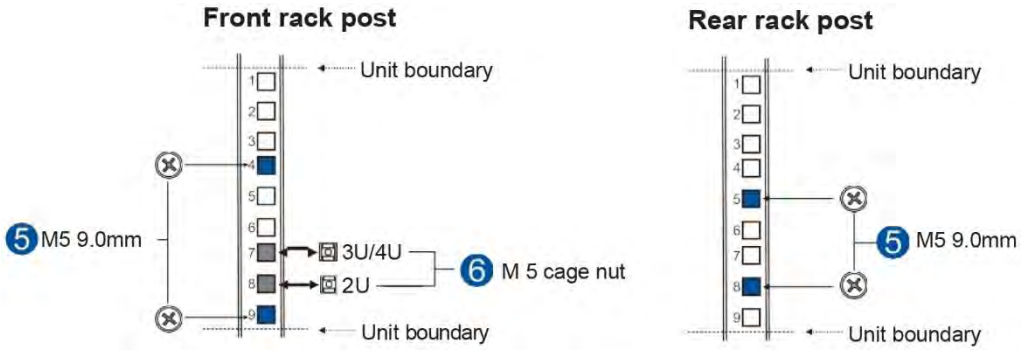

NOTE: If the rack does not require M5 cage nuts and has its own screw threads, use the M6 or No. 10-32 screws on the front posts.

2. Loosen the four screws on the slide rail (A), adjust its length (B), then secure the slide rail to the front and rear rack posts using the M5 9.0mm screws (C). Tighten the four screws on the slide rail to fix the length.

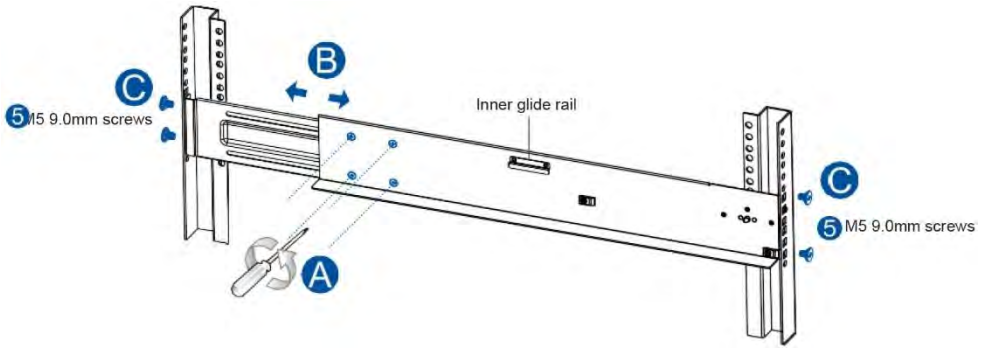

3. Attach the inner glides to both sides of the enclosure using the no. 6-32 flathead screws.

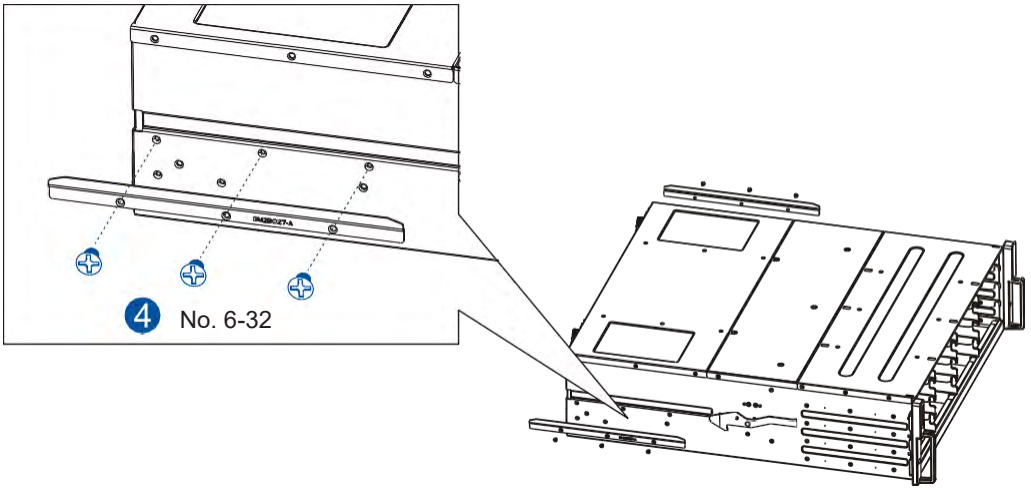

4. With the assistance of another person, lift and insert the enclosure onto the slide rails. Ensure that the inner glides on both sides of the enclosure meet the inner glide rails.

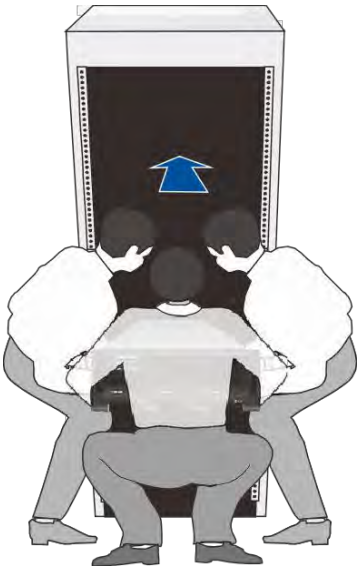

5. Secure the enclosure using the M5, M6, or no. 10-32 screws on the front.

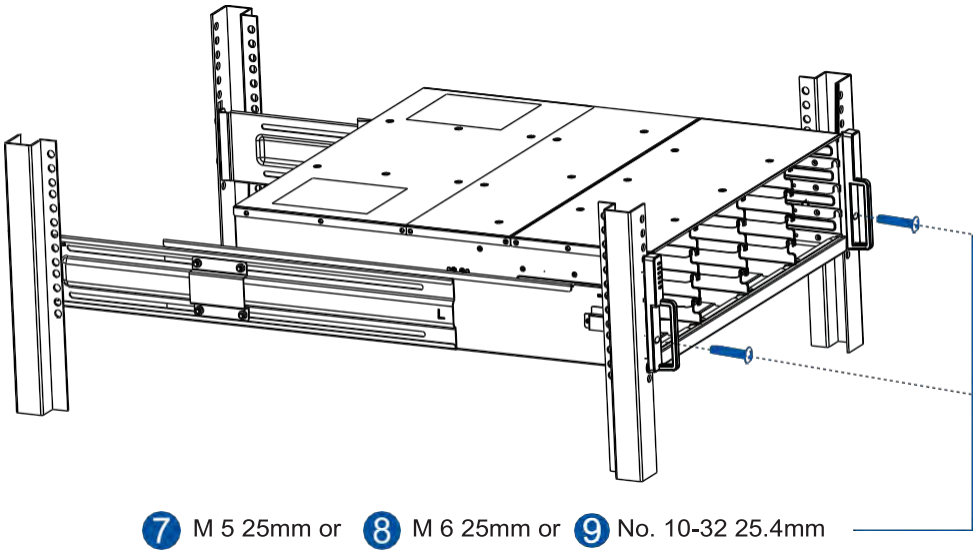

When the enclosure is already assembled to the cabinet, you can proceed to the next installation procedures of other components.

Rackmount Slide Kit Contents (for PS 6360/6460)

Check your rackmount slide kit for the following contents.

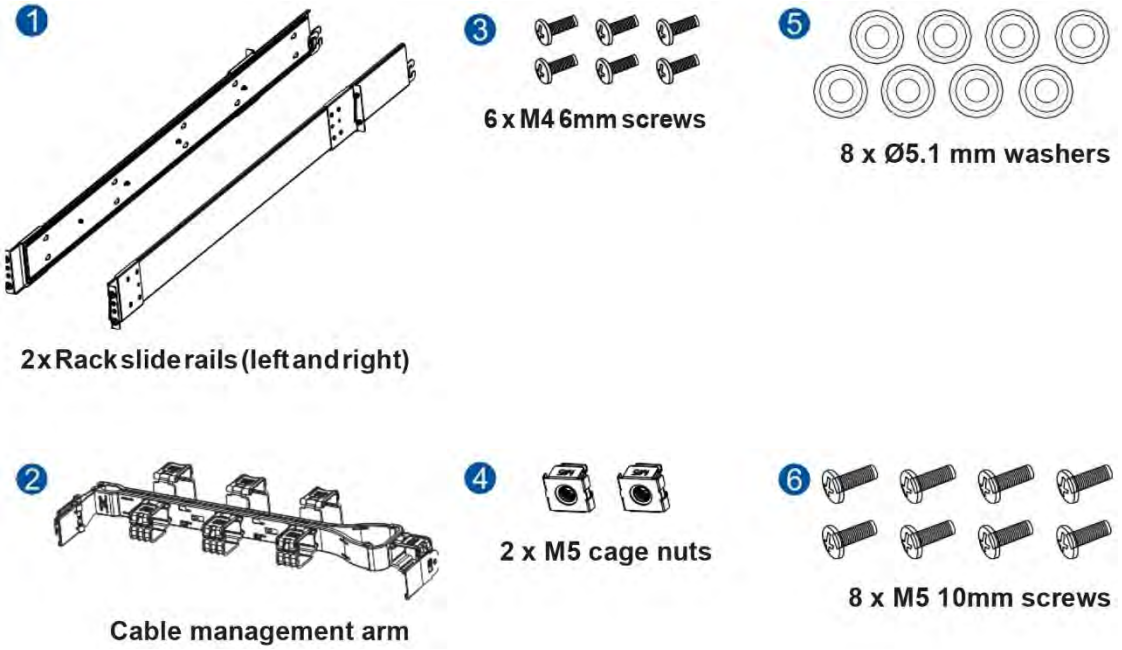

NOTE: The rack slide rails are assembled together with the enclosure slide rails.

Adjuster Pillars

Check your adjuster pillars kit for the following contents.

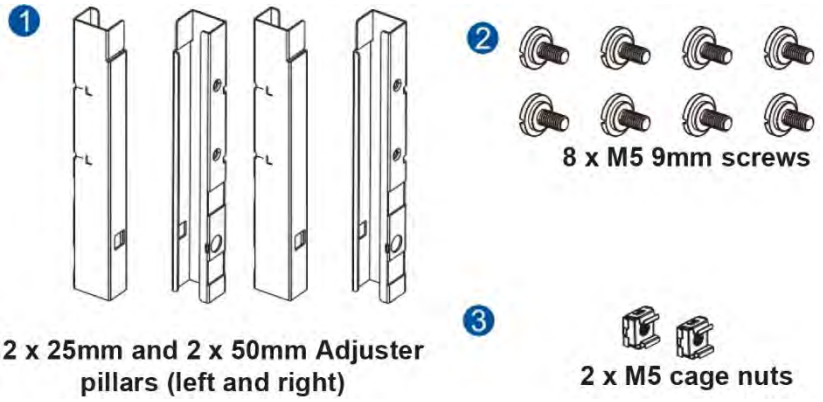

NOTE: The adjuster pillars kit is only needed if the rear end of your system protrudes at the rear end of the cabinet.

Assembling the Rackmount Slide Kit

To assemble the rackmount slide kit:

1. Press the release button (A) then remove the inner bar (B) from the slide rail.

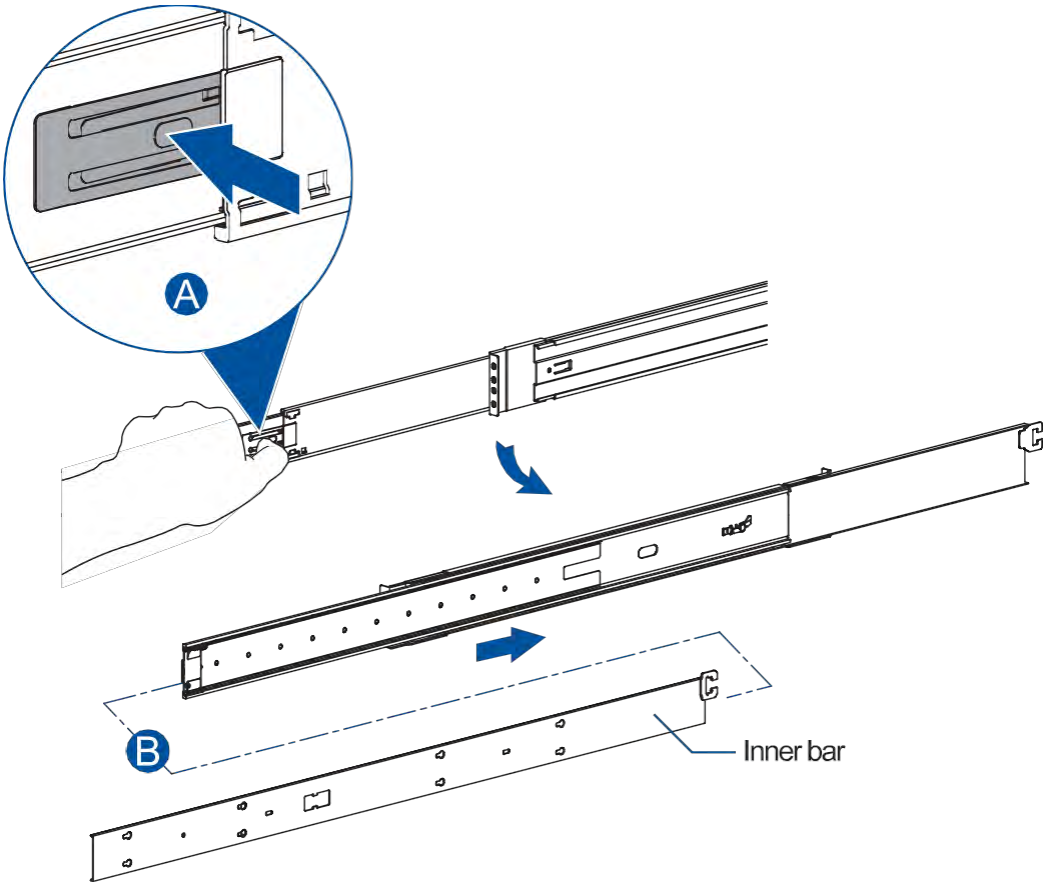

2. Move the lever to the right side (follow the direction of the engraved arrow), then compress the remaining bars of the slide rail.

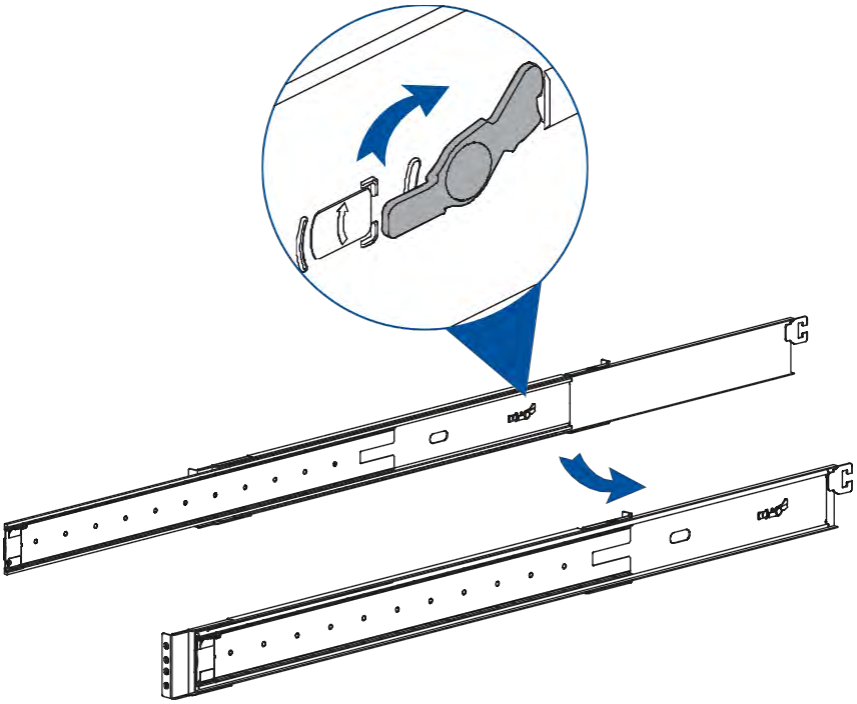

3. Determine the location where you want to install the slide rails to the rack posts.
4. Attach the slide rails to the rack posts using either M5 10mm screws and washers, four for the front posts and four for the rear posts.

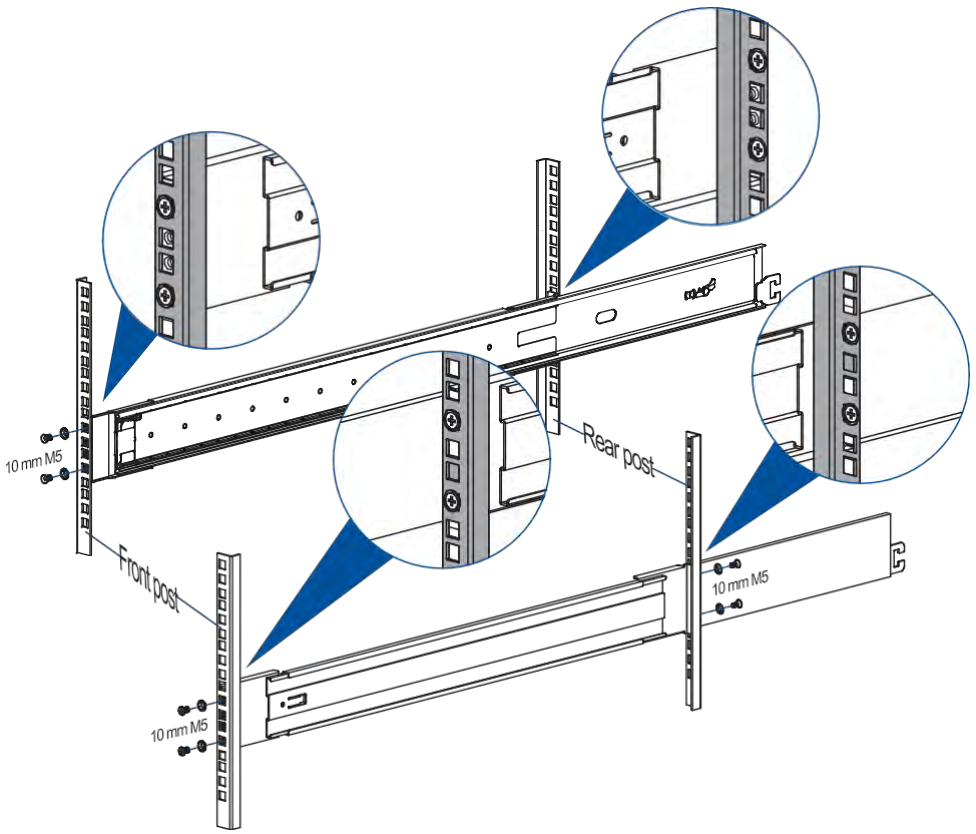

Installing the Cable Management Arm to the Rackmount

The cable management arm allows you to keep the cables in place for a clutter-free rackmount system.

To install the cable management bar:

1. From the cable management arm, push the button near the latch at each end of the arm, then rotate the latch shield in a 180° angle.

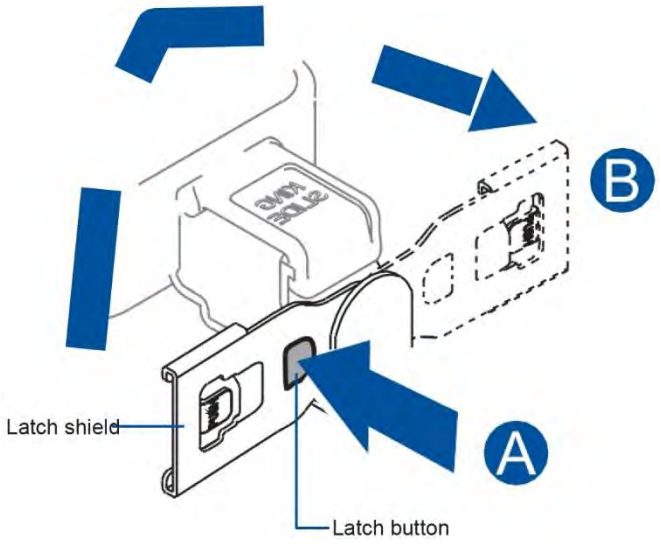

2. Connect the latches of the cable management arm to the latches of the slide rails.

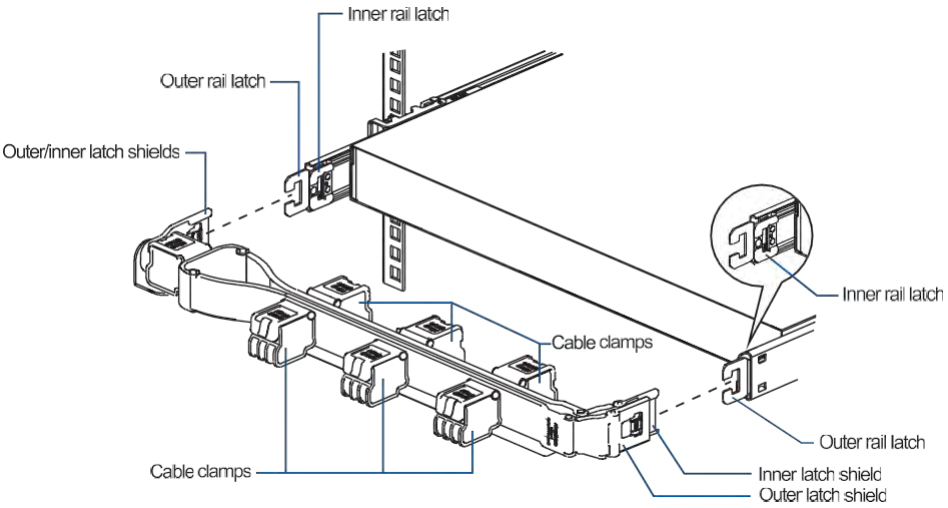

a. Connect the inner latch shield of the cable management arm to the inner latch of the inner slide rail. Do this on both sides of the arm and rails.

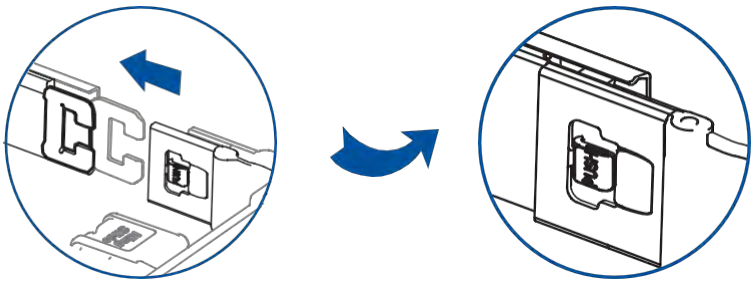

b. Connect the outer latch shield of the cable management arm to the outer latch of the outer slide rail. Do this on both sides of the arm and rails.

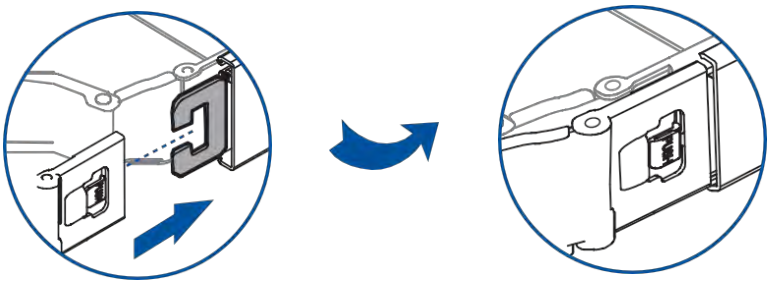

If you need to move the cable clamp to another position, do the following steps:

1. Push the latch to release the cable clamp from the cable management arm.

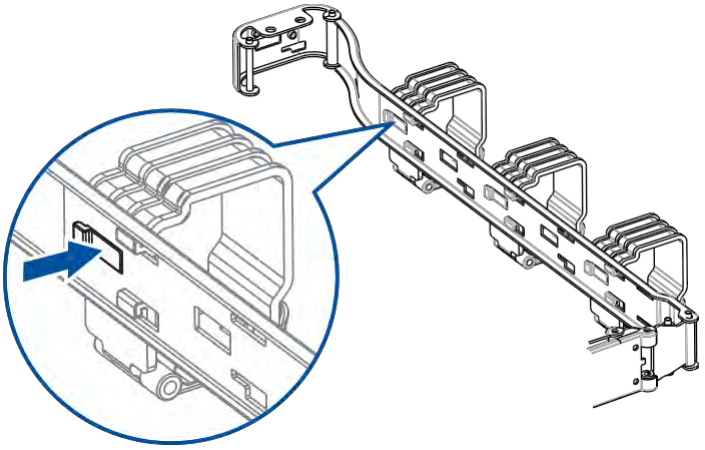

2. Move the clamp to the bigger hole of the notch, then pull to remove it from the locking holes.

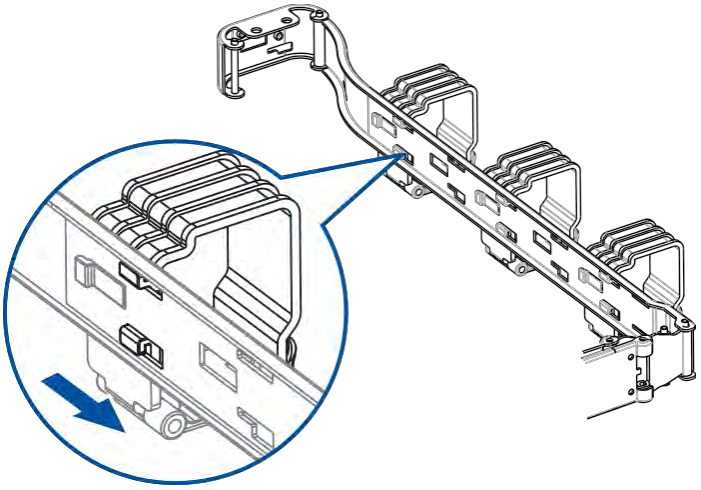

3. Align the clamp's latches to the notches of the cable management arm, then slide the clamp to the narrow hole of the notch until it snaps in place.

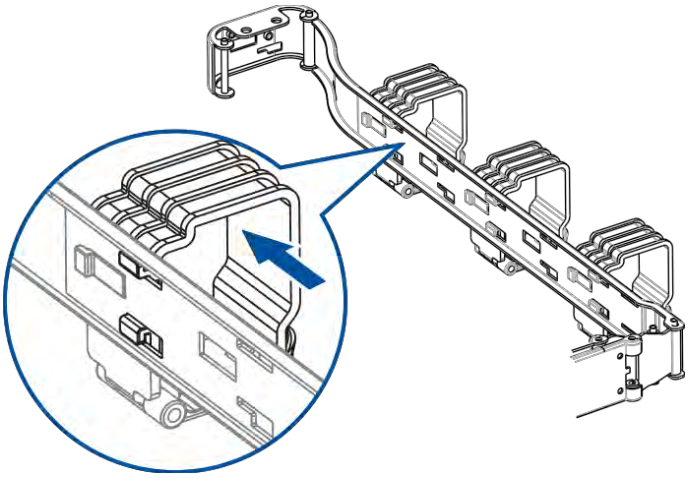

Installing the Adjuster Pillars

Depending on your front rack posts positions on the chassis guide, you may need to install the adjuster pillars so that the rear end of the enclosure will not protrude on the rear end of the cabinet.

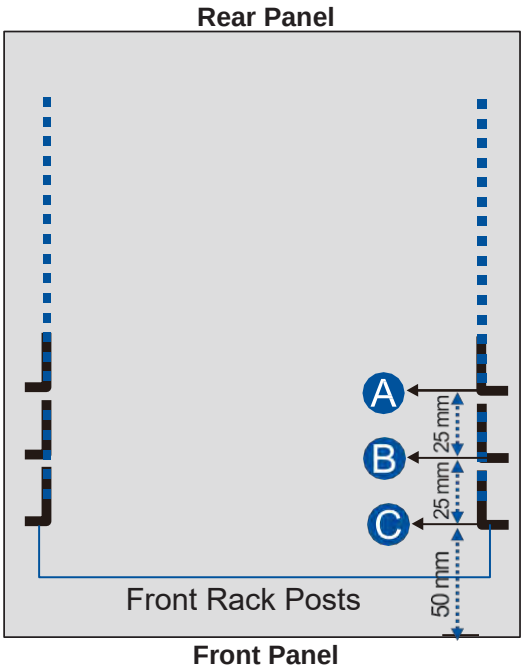

Top View of Cabinet Structure

If your front rack posts are secured on the chassis guide at:

- position A, install the 50mm adjuster pillars before installing the enclosure.
- position B, install the 25mm adjuster pillars before installing the enclosure.
- position C, no need to install the adjuster pillars.

NOTE: Rack post installation positions conform to the rackmount server chassis standards of SSI (Server System Infrastructure).

To install the adjuster pillars:

1. Check the unit boundary on the front rack posts.

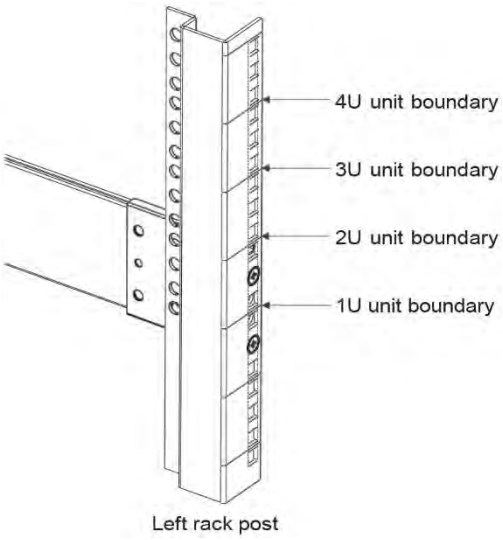

2. Orient the left and right adjuster pillars and secure them with the bundled screws at 2U and 3U positions on the front rack posts.

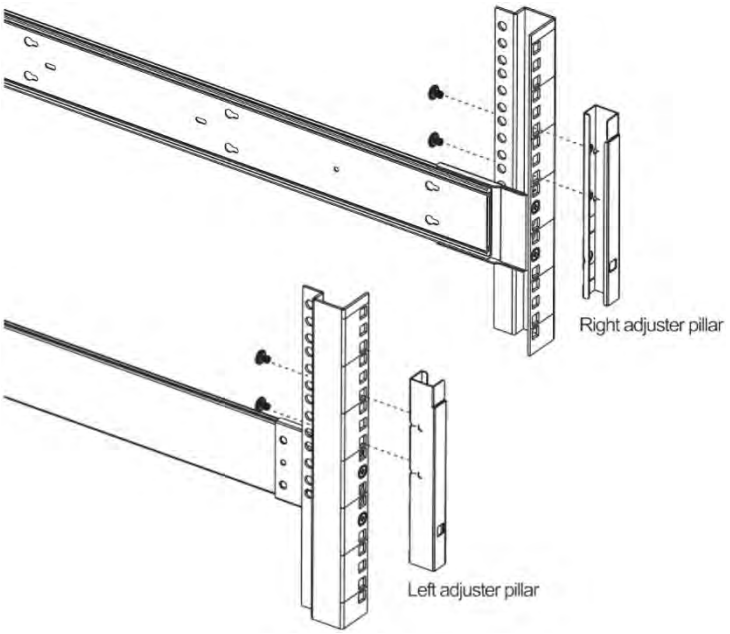

3. Insert the two bundled cage nuts into the cage nut holes on the adjuster pillars to secure the enclosure in place later.

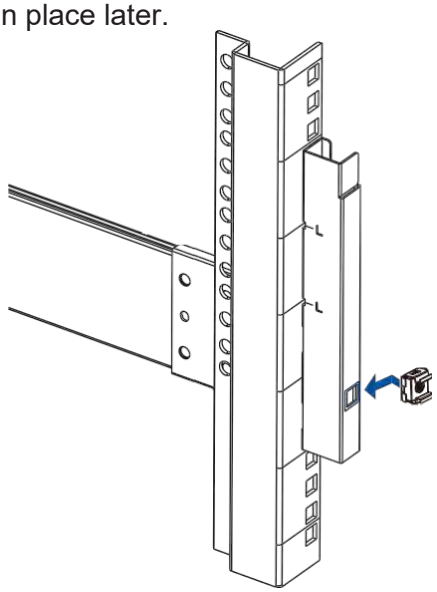

Installing the Chassis to the Assembled Rackmount

To install the chassis to the assembled rackmount:

1. For the inner bars that you removed from the slide rails, install them to the sides of the enclosure:

   a. Align and fit the inner bar's sockets to the four hinges of the enclosure, then slide it to the back of the enclosure. Do the same for the other side.

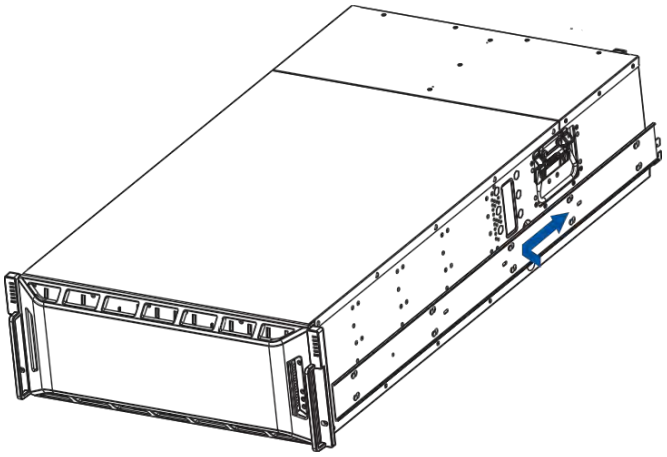

   b. Use two M4 6mm screws to secure the inner bars to the sides of the enclosure.

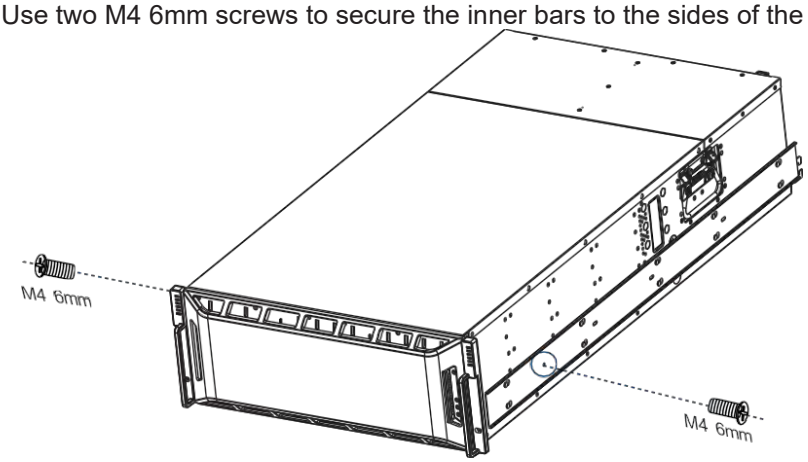

2. Extend the middle slide rails (A), then align them to the installed inner bars and insert the whole enclosure to the rack (B).

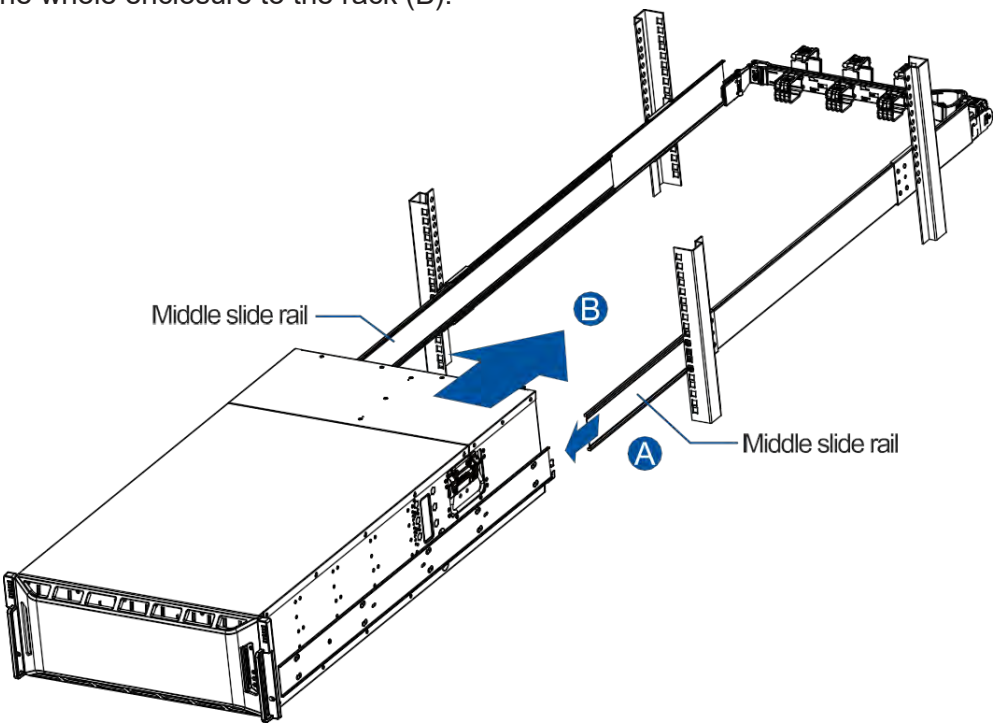

IMPORTANT! Due to the weight of the enclosure, we recommend you have assistance from at least two other people to install the enclosure to the rack.

3. Use two M5 20mm screws to fasten the enclosure to the front rack posts.

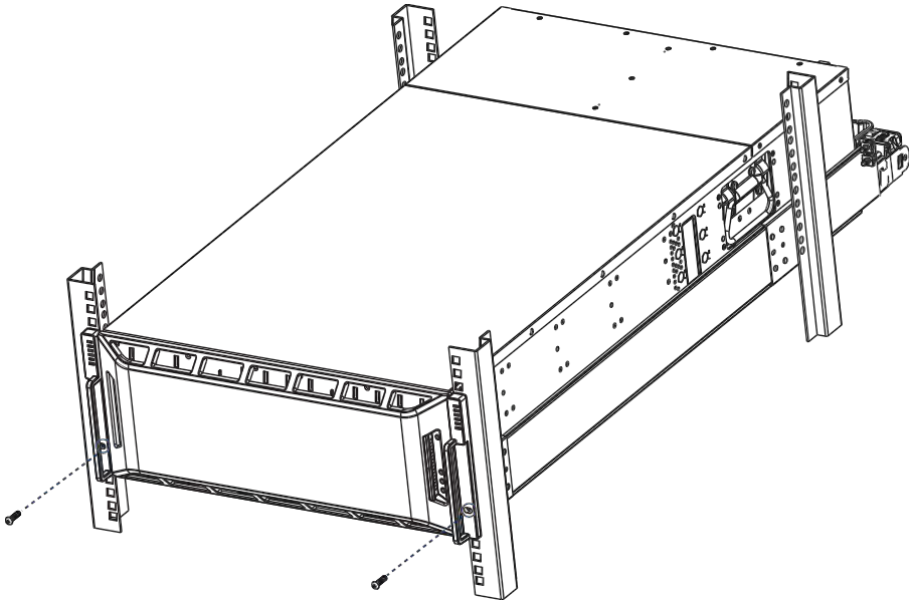

NOTE: If the rack posts have unthreaded mounting holes, insert two M5 cage nuts to the said holes then use the M5 screws to secure the enclosure to the rack.

Installing the Hard Drives

This section gives you an overview of the hard drive requirements, installation, and important notices that you must take note.

NOTE: The hard drives are purchased separately.

IMPORTANT!

- Ensure to install the enclosure to the rack first before installing the hard drives to the enclosure's drive bay.
- You must install all hard drives into the enclosure to set up a cluster.

Hard Drive Installation Prerequisites

When purchasing hard drives, ensure to consider the following factors:

- **Capacity (Mb/Gb)**

  Purchase the hard drives that have the same capacity. The main storage uses the least common denominator approach, which means that the maximum capacity used in each drive to create a RAID array is the maximum capacity of the smallest drive. We strongly suggest using large storage capacity hard drives.

IMPORTANT!

- The hard drives may carry different block numbers, which means that the capacity may not be the same even if they are of the same model with the same rate capacity made by the same manufacturer.
- When configuring the hard drives into a RAID array, you can use a smaller capacity as the *maximum disk capacity* in every hard drive. For configuration options, refer to the interface-specific firmware manual that came with your enclosure.

- **Profile**

  The drive trays and bays of the system are designed for 2.5” or 3.5” hard drives.

- **Drive Type**

  The system uses 6Gb/s SAS, 12Gb/s SAS, nearline SAS, and SATA 3G/6G 2.5” and 3.5” hard drives.

IMPORTANT!

- Ensure that you purchase the correct hard drives.

SAS and SATA Interfaces

The SAS interface features a dual-ported connectivity with pins on both sides of its connector while the SATA drives have only one port.

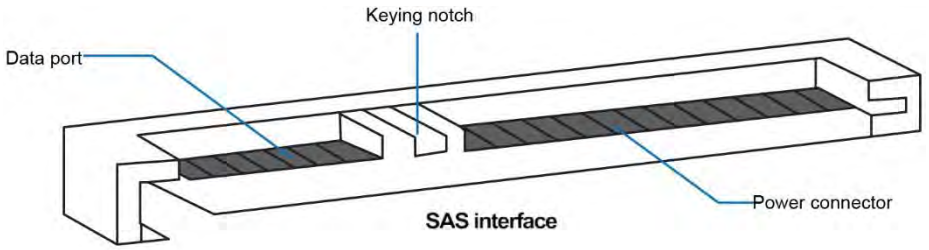

SAS interface

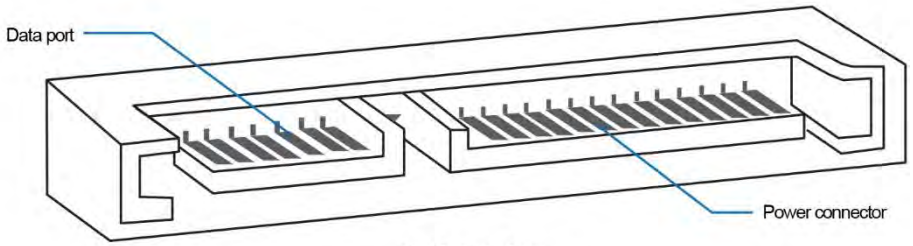

SATA interface

IMPORTANT!

- ONLY install the drive trays to the system if the system is already mounted to the rack. If the hard drives are installed to the system before mounting to the rack, the system will be heavy to mount and possible impact during installation may damage the hard drives.
- Handle the disk drives with extreme care and observe all ESD prevention procedures when installing the hard drives.
- ONLY use the scres that are bundled in the system package. Securing the drives with longer screws may damage them.

Hard Drive Designation

Get to know the exact order of the hard drives to avoid removing the wrong drives out of the enclosure.

IMPORTANT! Install all hard drives into the enclosure to set up a cluster.

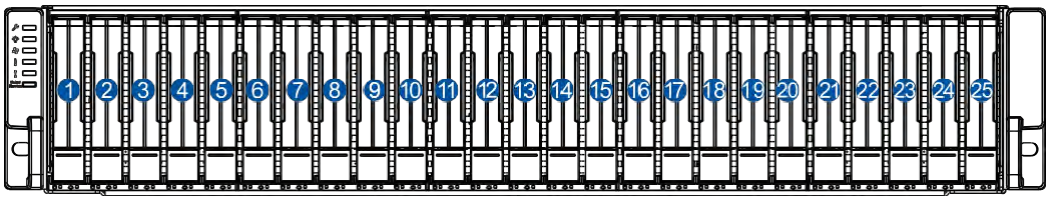

PS 6425

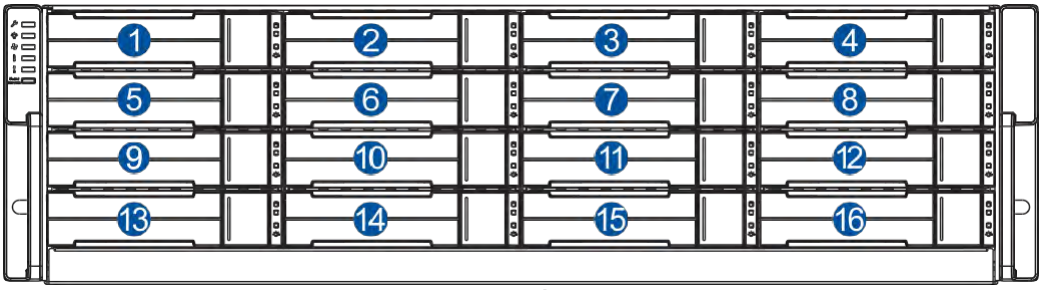

PS 6316/6416

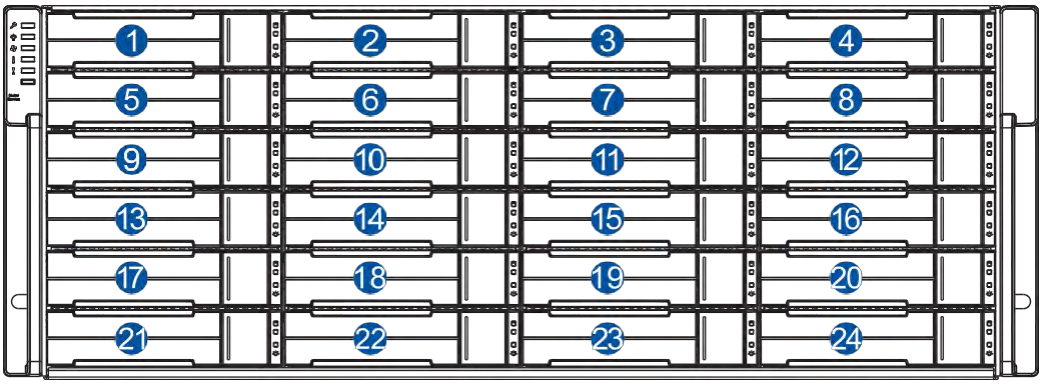

PS6324/6424

Rear of Enclosure

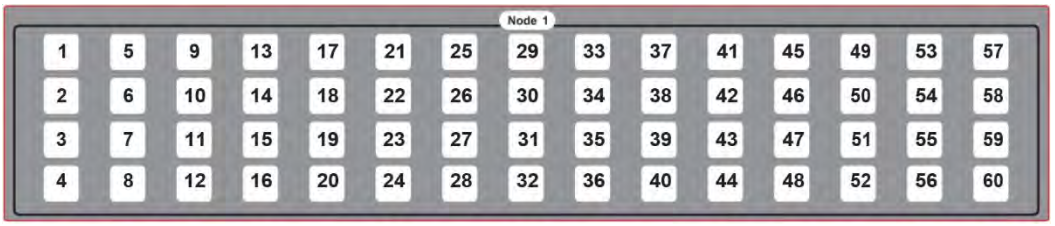

PS 6360/6460 (Single Node)

Rear of Enclosure

PS 6360/6460 (Dual Node)

Installing the Hard Drive into the Drive Tray and Enclosure (for PS 6316/6324/6416/6424)

To install the hard drive into the drive tray and enclosure, follow the steps below:

1. Press the release button to open the spring handle.

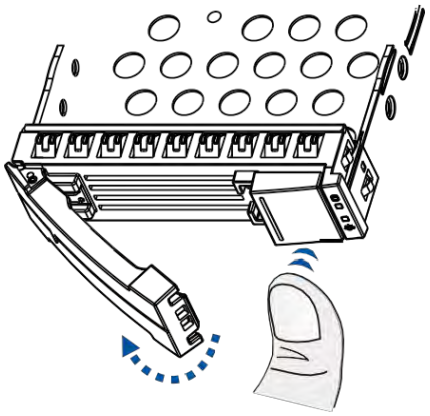

2. Orient the hard drive to the tray with the interface connectors facing the open side of the tray and the label facing up (A). Secure the drive to the correct holes of the tray using the four bundled screws (B).

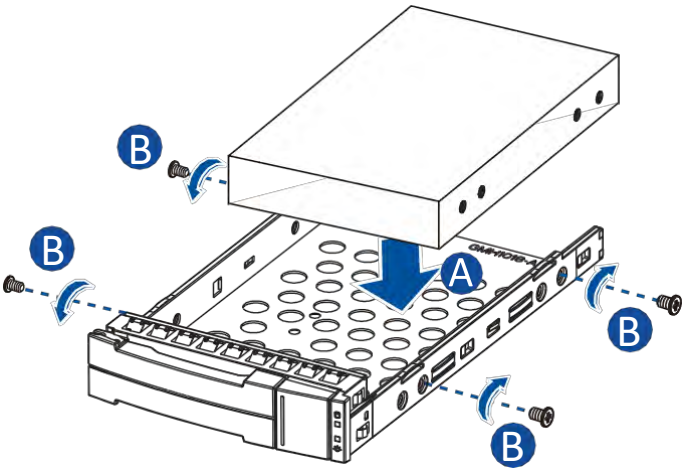

3. Insert the assembled hard drive and tray into the enclosure with the spring handle open.

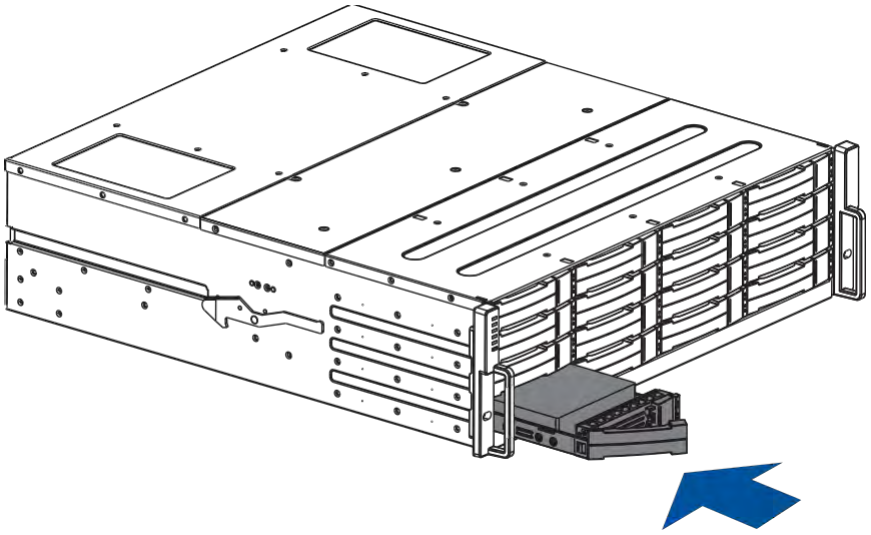

WARNING! Ensure that your system has all the drive bays occupied with the drive trays even if there are no hard drives installed. Without the drive trays, the ventilation is compromised and may cause overheating.

4. When the tray is fully inserted into the bay, close the spring handle.

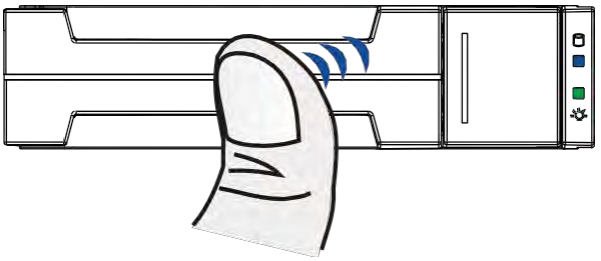

Installing the Hard Drive into the Drive Tray and Enclosure (for PS 6425)

To install the hard drive into the drive tray and enclosure, follow the steps below:

1. Press the release button to open the spring handle.

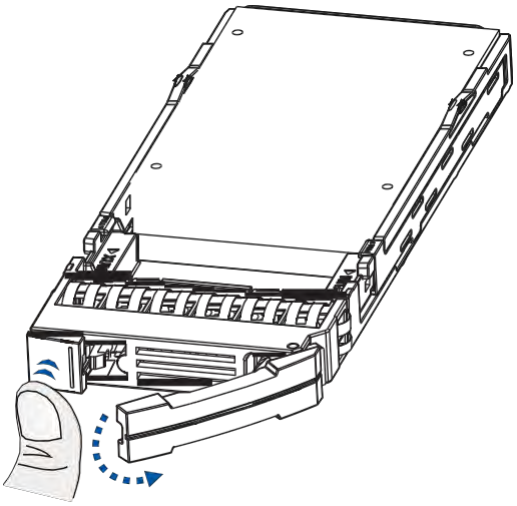

2. Place the hard drive on the tray (A), then secure the clips to both sides of the tray (B).

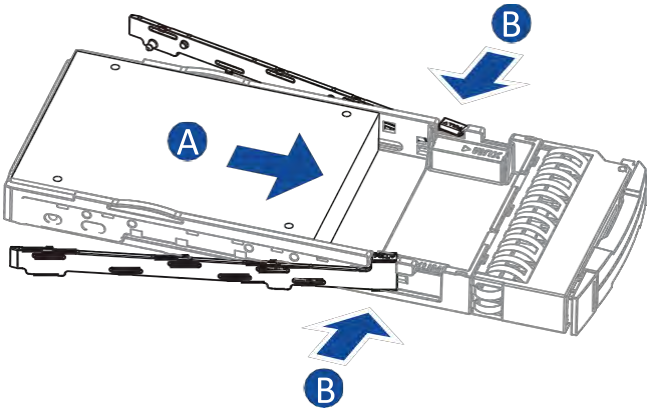

3. Insert the assembled hard drive and tray into the enclosure with the spring handle open.

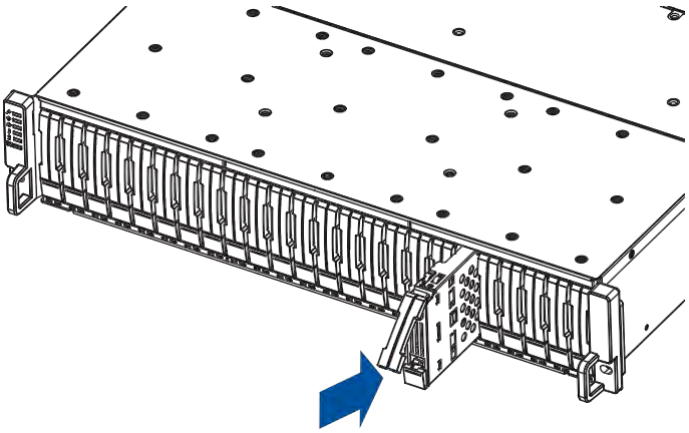

4. Close the spring handle when the drive is fully inserted into the bay.

Installing the Hard Drive into the Drive Tray and Enclosure (for PS 6360/6460)

To install the hard drive into the drive tray and enclosure, follow the steps below:

1. Push the release button to the left.

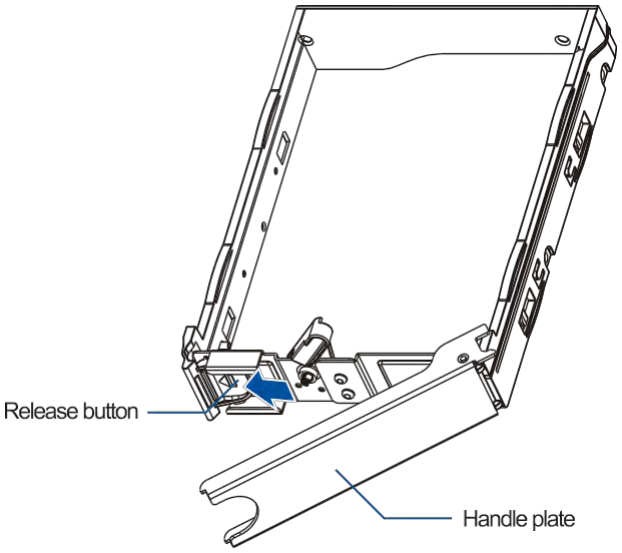

2. Move the lever tray to the left to unlock the sides.

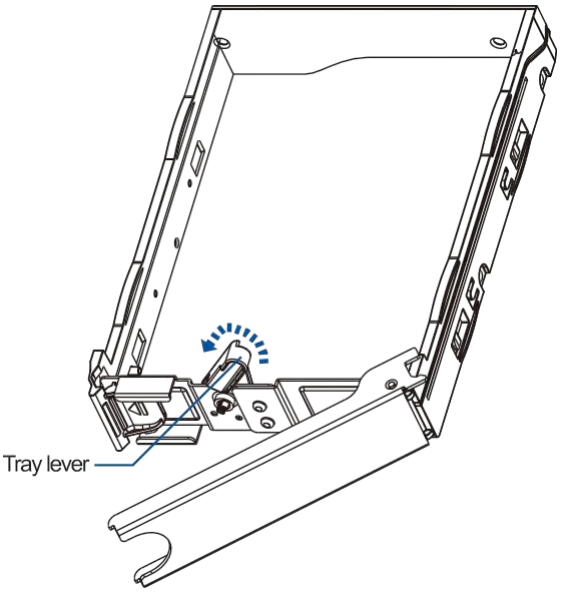

3. Pull both sides to widen the tray.

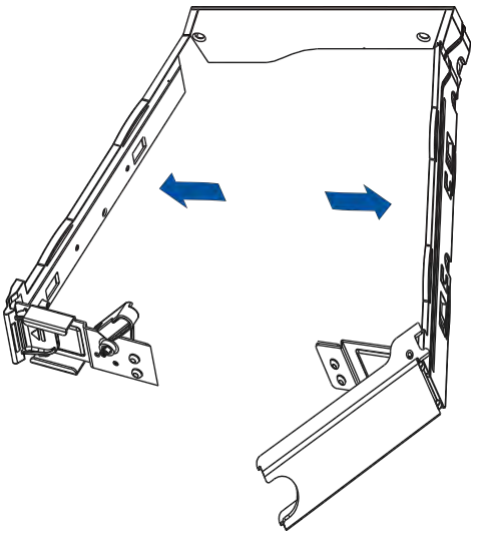

4. Orient the drive to the drive tray's two pins on its sides.

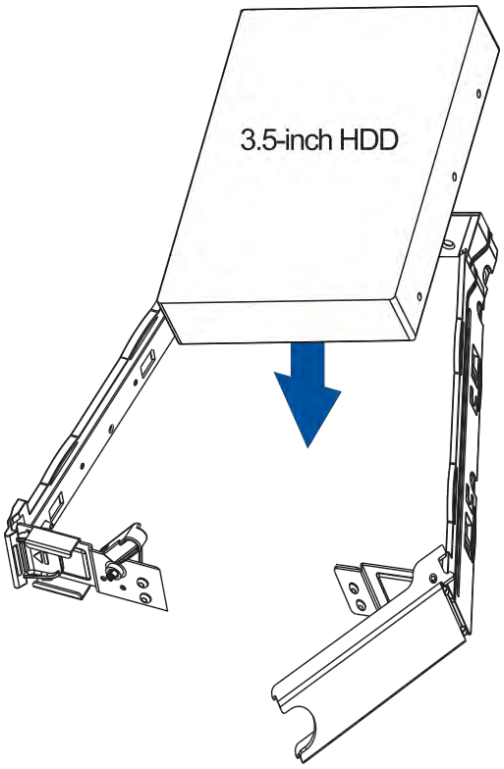

5. Secure the side to the hard drive with the release button first (A), then the side with the handle plate (B), then move the tray lever to the left (C). Keep the handle plate open.

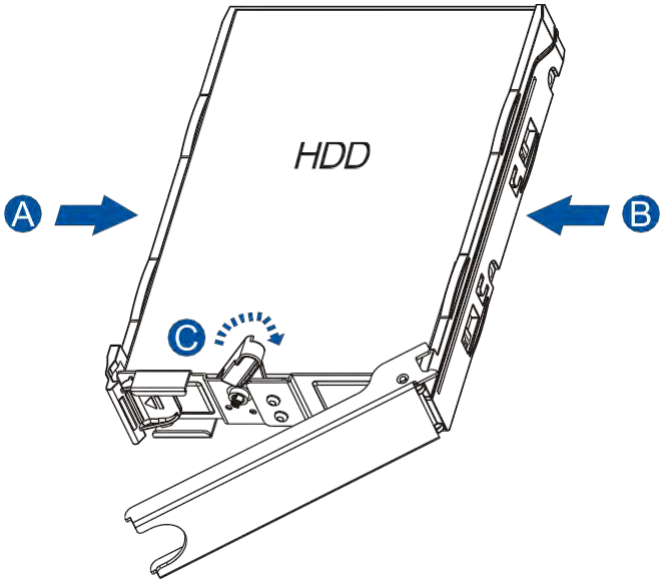

6. Remove the front cover of the enclosure (A). Loosen the screws that secure the top cover (B). Gently slide the top cover forward then lift it up (C).

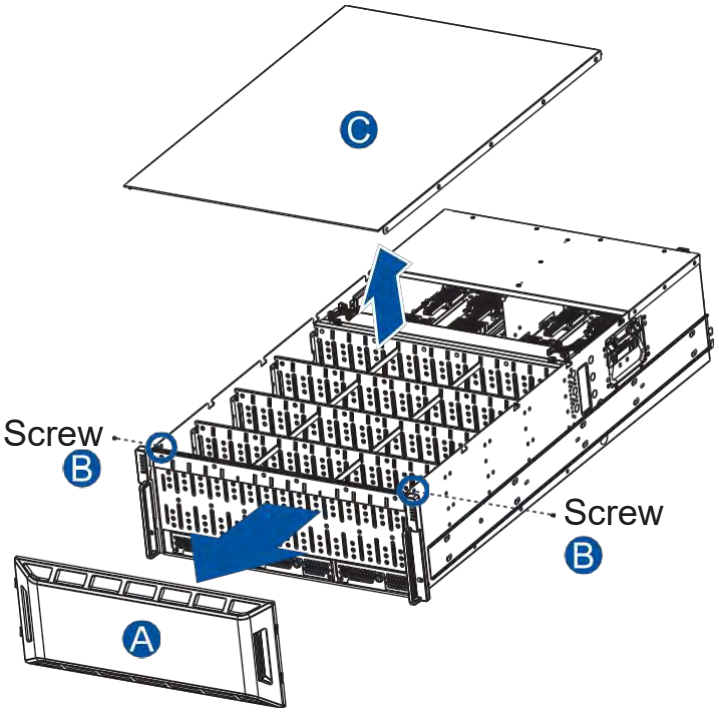

7. Install the hard drive and tray assembly into the hard drive slot of the enclosure with the handle plate open, then push the handle plate to connect with the enclosure.

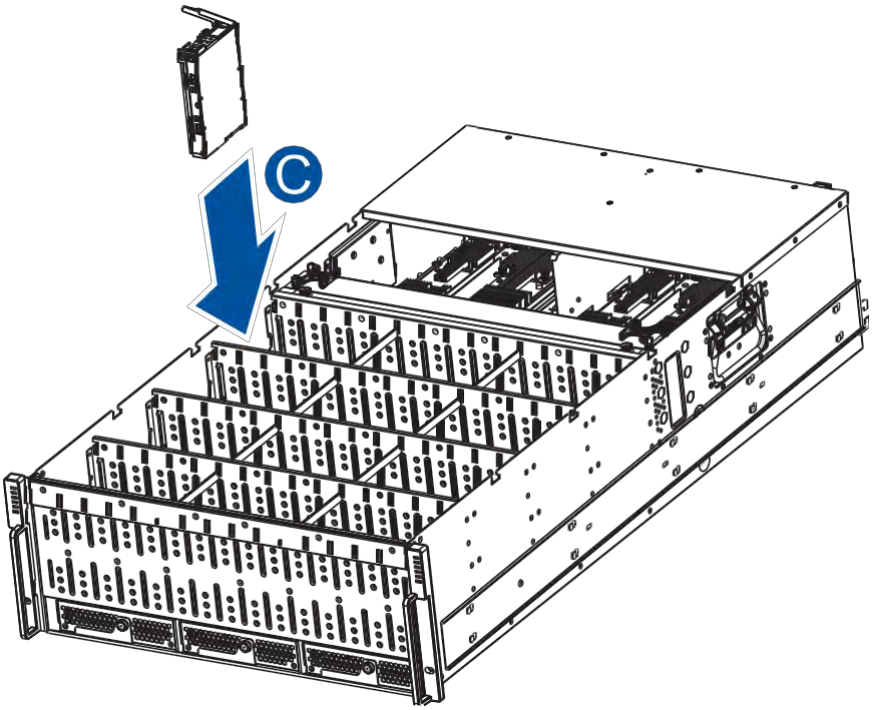

8. Put the top cover back. Fasten two screws to secure the top cover. Put the front cover back on. Use two M5 20mm screws to fasten the enclosure to the front rack posts.

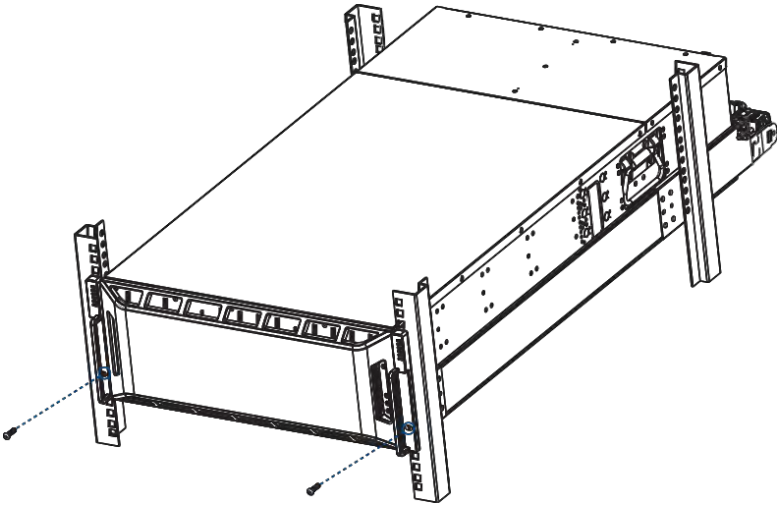

Installing the Host Boards

NOTES:

- Always install the host board at the left slot first.
- A downtime may occur when upgrading the controller/host board.
- If there are any removal/insert/change of type of host board, the system will reset to default system and NAS settings to prevent previous settings from creating unexpected behavior with the new hardware change. Therefore, please export the NVRAM before making any changes.

IMPORTANT! Shut down the applications and the system first when installing a host board.

To install a host board (for PS 6316/6324/6416/6424/6425)

1. Disconnect all cables from the controller module.
2. Loosen the screws that secure the controller module's ejection levers to the chassis.

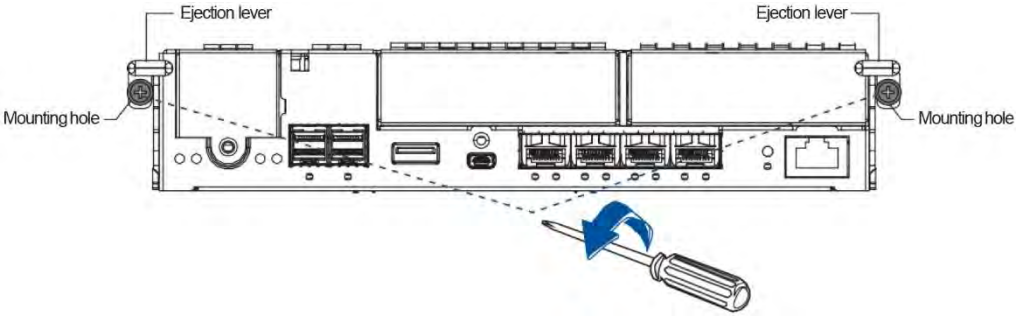

3. Push the ejection levers downwards to dislodge the controller from the system (A), then pull to remove from the enclosure (B).

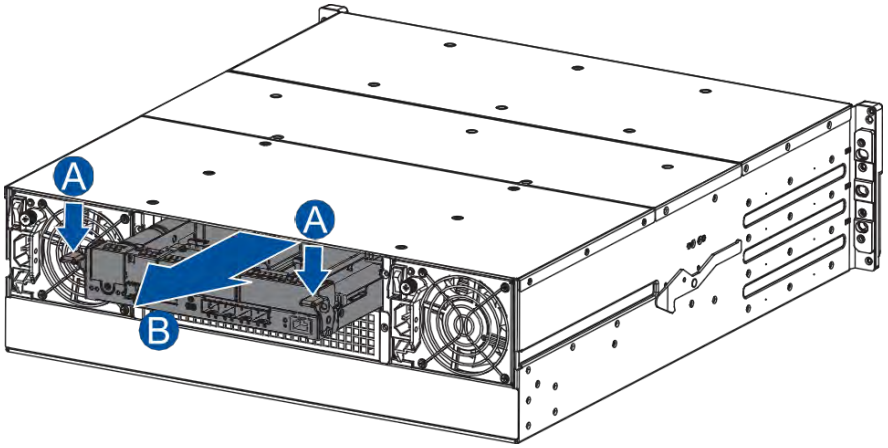

4. Loosen the screw that secures the dummy cover to the controller and remove the dummy cover.

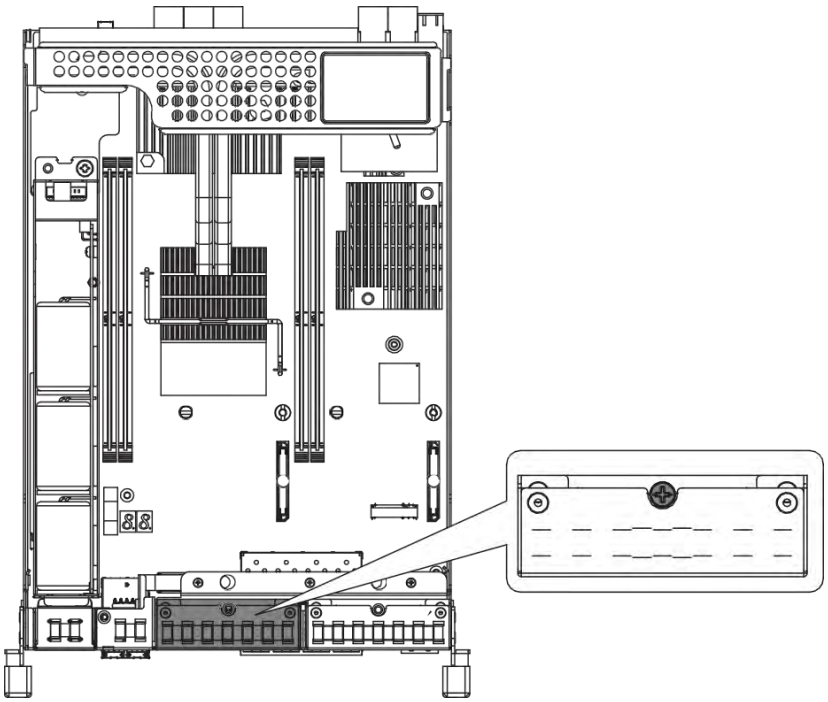

5. Use the guide pin to position the new host board to the host board slot, place it carefully (A), then tighten the thumb screw to secure the host board in place (B).

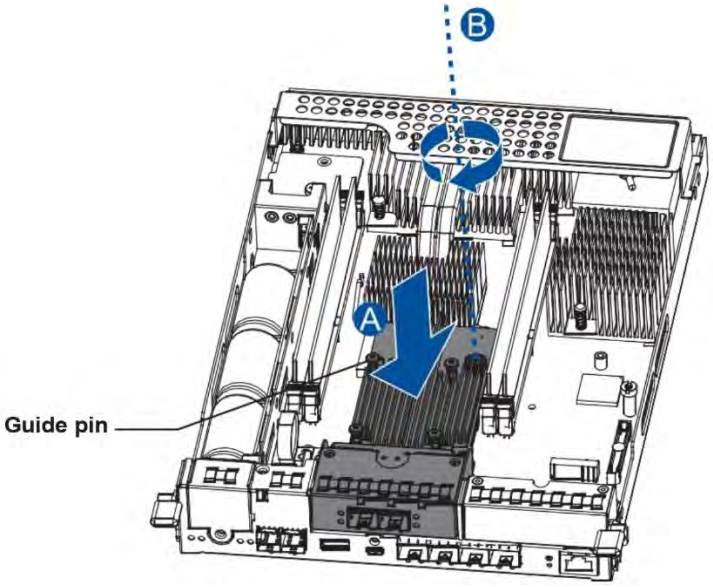

6. Insert back the controller carefully into the module slot (A). When you feel a contract resistance, use a small but careful force and push the ejection levers upwards to secure the controller into the chassis (B).

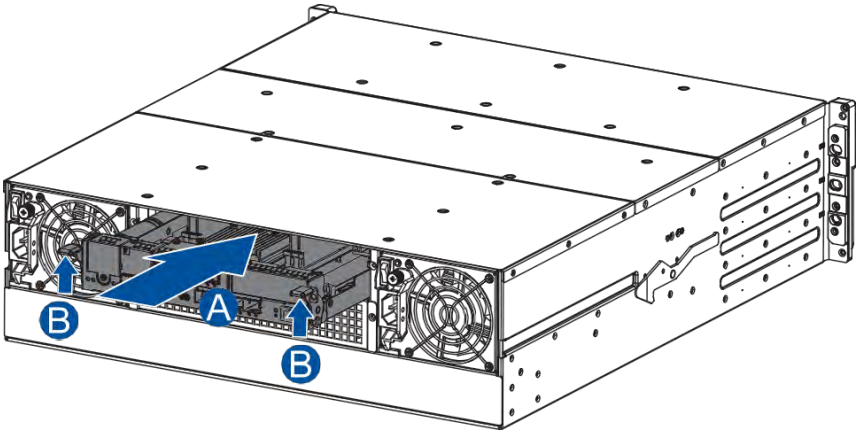

7. Secure the controller to the enclosure with the retention screws. Reconnect the cables to the controller module.

To Install a Host Board (for PS 6360/6460)

1. Unfasten the retention screw from the controller that you want to install the host board (A) and hold the rim then remove the controller from the system (B).

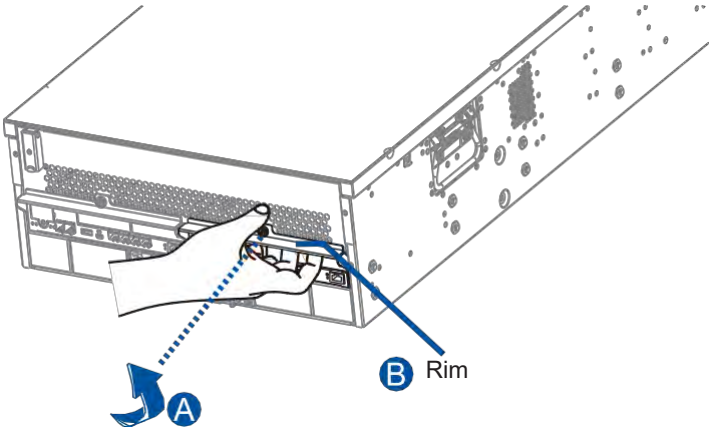

2. Remove the screw that secure the dummy cover to the enclosure.

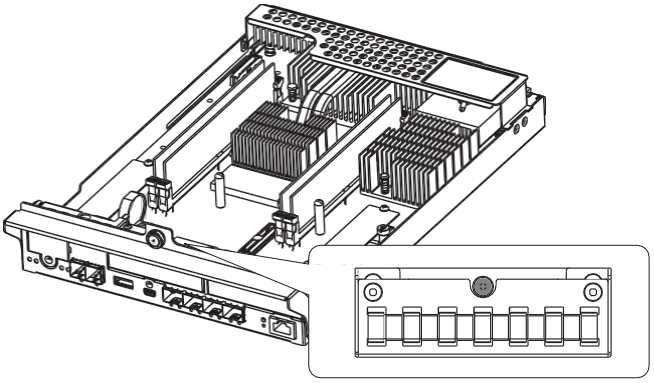

3. Orient the new host board to the controller's guide pin, place it carefully, then tighten the thumb screw to secure in place.

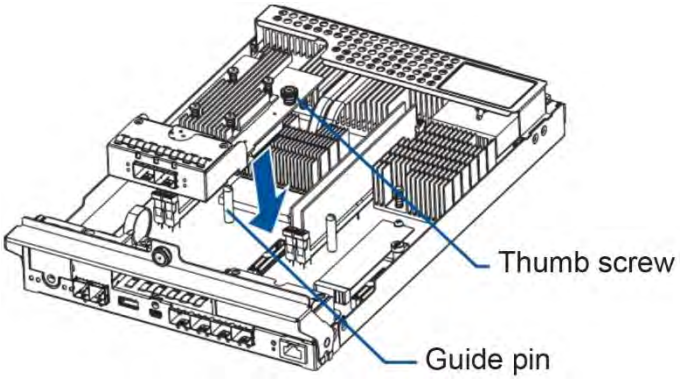

4. Insert the controller carefully into the module slot. When you feel a contact resistance, push the controller with a small but careful force, then secure the controller to the enclosure with the retention screw.

Connections

This section details the connection procedures of the PS Scale-Out NAS system to the expansions, power source, connection status, topologies, and other connection configurations.

General Considerations in Connecting Devices

You must also take note of these considerations:

- Install ALL hard drives into the enclosure to set up a cluster.
- You must not include both SAS and SATA drives in a logical drive.
- When connecting between devices, follow all the specifications. Pay attention to the signals and avoid electronic noise from adjacent interfaces. DO NOT put power cords on optical cables.
- When rackmounting, leave enough space for the cables. DO NOT bend them to a diameter of less than 76mm (3in).
- Route the cables away from places where it can be damaged by other devices such as foot traffic or fan exhaust.
- DO NOT over-tighten, twist, or bend the cables.

Expansion Connections

When expanding your system, you can add expansion (JBOD) systems and connect between devices via the SAS ports.

A SAS host link cable is bundled per expansion package. If you need to purchase other cables, or if you need other cables of different lengths, contact your vendor.

Before configuring the expansions, you must take note of the following important points:

- For a cleaner and clutter-free rack system, have a carefully planned routing path when connecting between systems.
- All SAS cables are sensitive and must be handled with care. DO NOT bend or twist the cables when connecting the systems installed to the rack.

Configuring the SAS Expansion

The SAS expansion port of the PS Scale-Out NAS system connects to the expansion systems. If you need to connect expansion systems from two opposite directions, you may need a longer cable. Routing between two different connections can avoid loss of data links if one expansion fails to operate.

Setting the Expansion IDs

Each expansion system must have a unique ID and you can configure the ID via the rotary ID switch. To set the expansion IDs, use a small flat-blade screwdriver.

You must take note of the following when setting the IDs on the expansion system:

- When setting an ID on the JBOD system, you must start from:
    - Use the same JBOD models if you want to attach more storage expansion.
- PS 3U 16-bay and 4U 24-bay models connect to three PS16J3 or one PS60J4. PS 2U 25-bay model connects to three PS25FJ2.

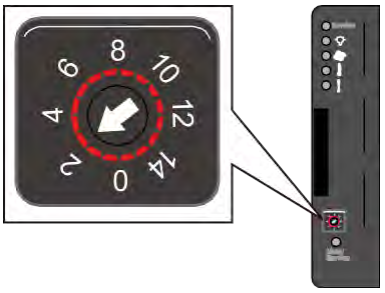

Connecting Expansion Systems

Connecting expansions using the onboard SAS expansion ports. The below drawing illustrates IN to OUT connections between the PS 6316 and three PS16J3's.

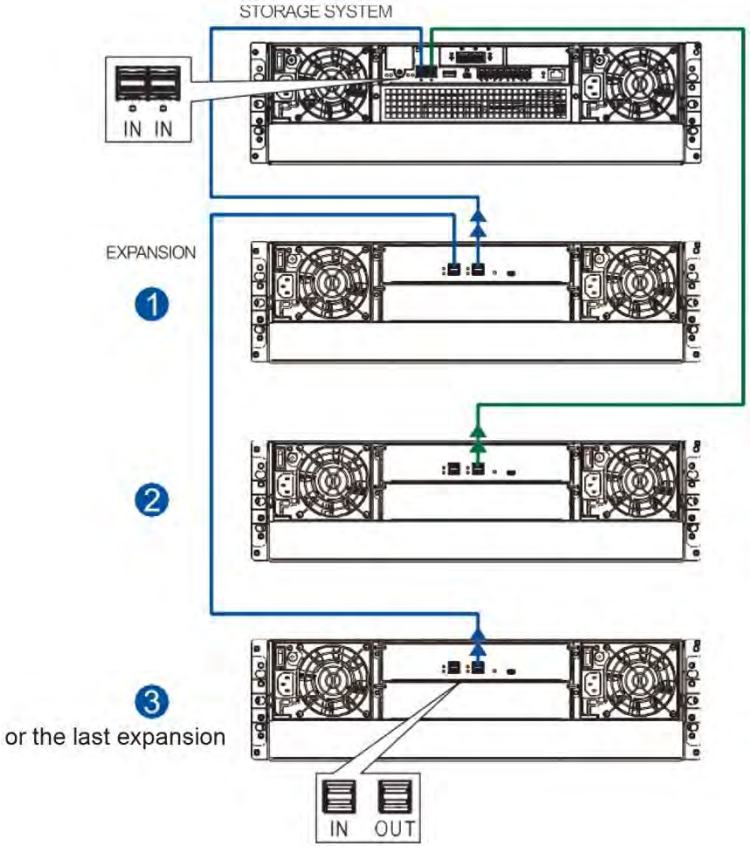

- Storage controller: left SAS port **IN** ➡ Expansion ❶: SAS port **OUT**
- Expansion ❶: SAS port **IN** ➡ Expansion ❸: SAS port **OUT**
- Storage controller: right SAS port **IN** ➡ Expansion ❷: SAS port **OUT**

Cluster Connection

Before creating a cluster, you must take note of the following interfaces and their information:

- Internal Network Port: Nodes communicate via this port
- Front-End Network Port: Clients access the cluster data via this port
- Management Port: Administrator manages the cluster via this port

There are 5 network combinations for PS Scale-Out NAS systems.

Combination 1: Onboard 2 10GbE (Front-End) + Onboard 2 x 10GbE (Internal)

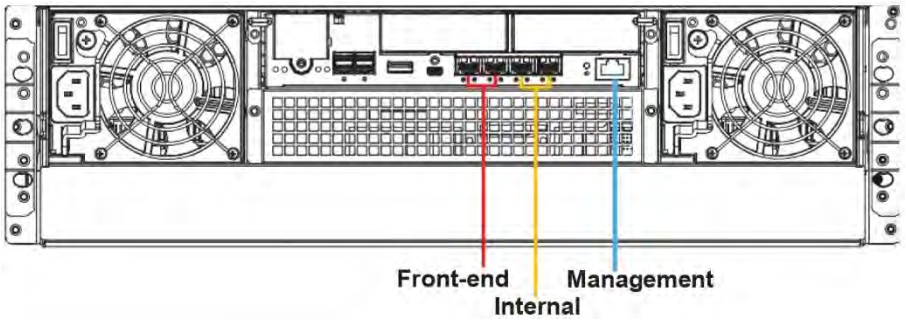

Combination 2: Onboard 4 x 10GbE (Front-End) + Host Board 2 x 25GbE (Internal)

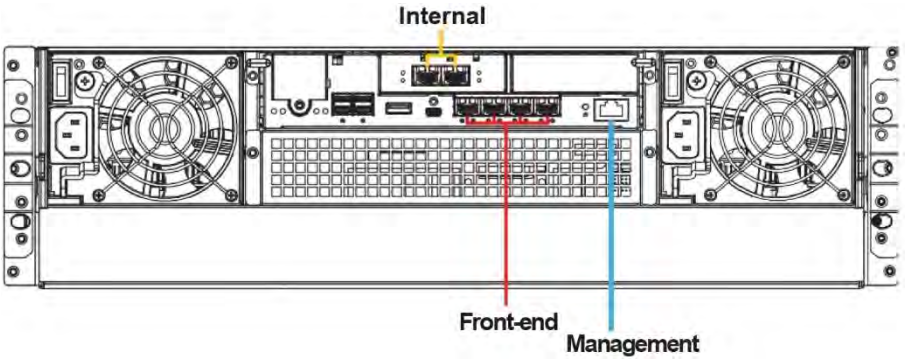

Combination 3: Onboard 4 x 10GbE (Front-End) + Host Board 2 x 40GbE (Internal)

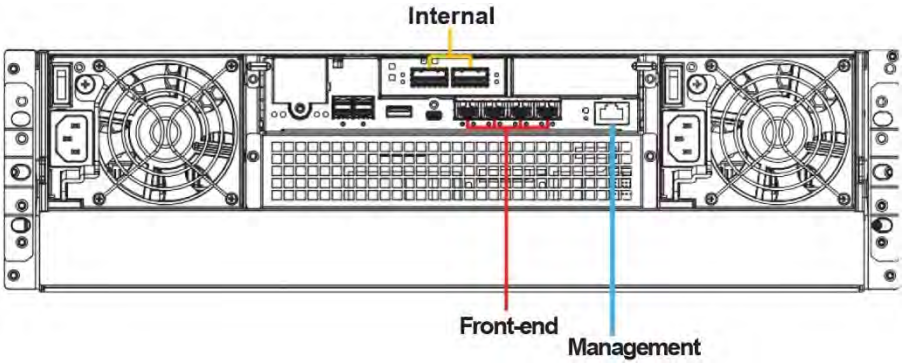

Combination 4: Host Board 2 x 25GbE (Fron-End) + Host Board 2 x 25GbE (Internal)

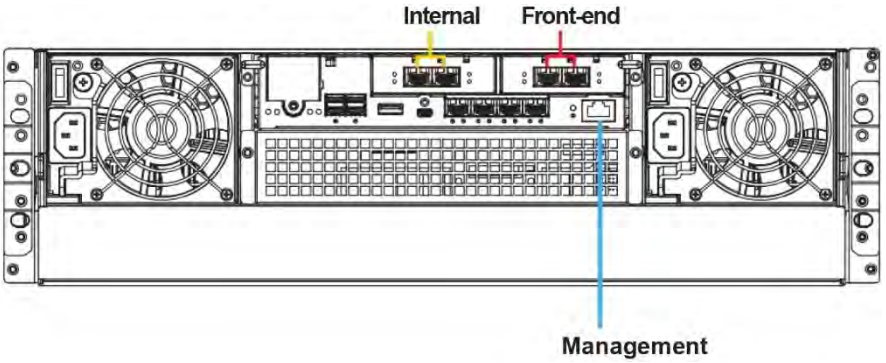

Combination 5: Host Board 2 x 40GbE (Front-End) + Host Board 2 x 40GbE (Internal)

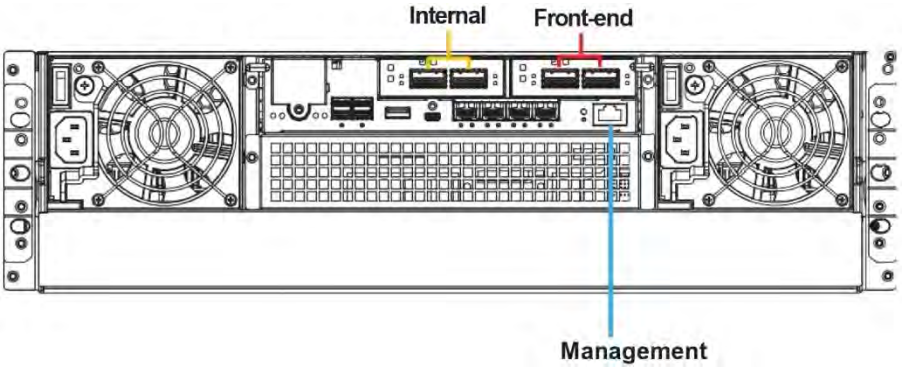

NOTE: For TCP/IP connection and firewall configuration, refer to the PAC Management Software, your management software's online help, or user manual. If your network is not running the DHCP server protocols, you can use the default IP **10.10.0.1** if you are accessing for the first time.

The below sample diagram illustrates Combination 2 on connecting devices to create a cluster.

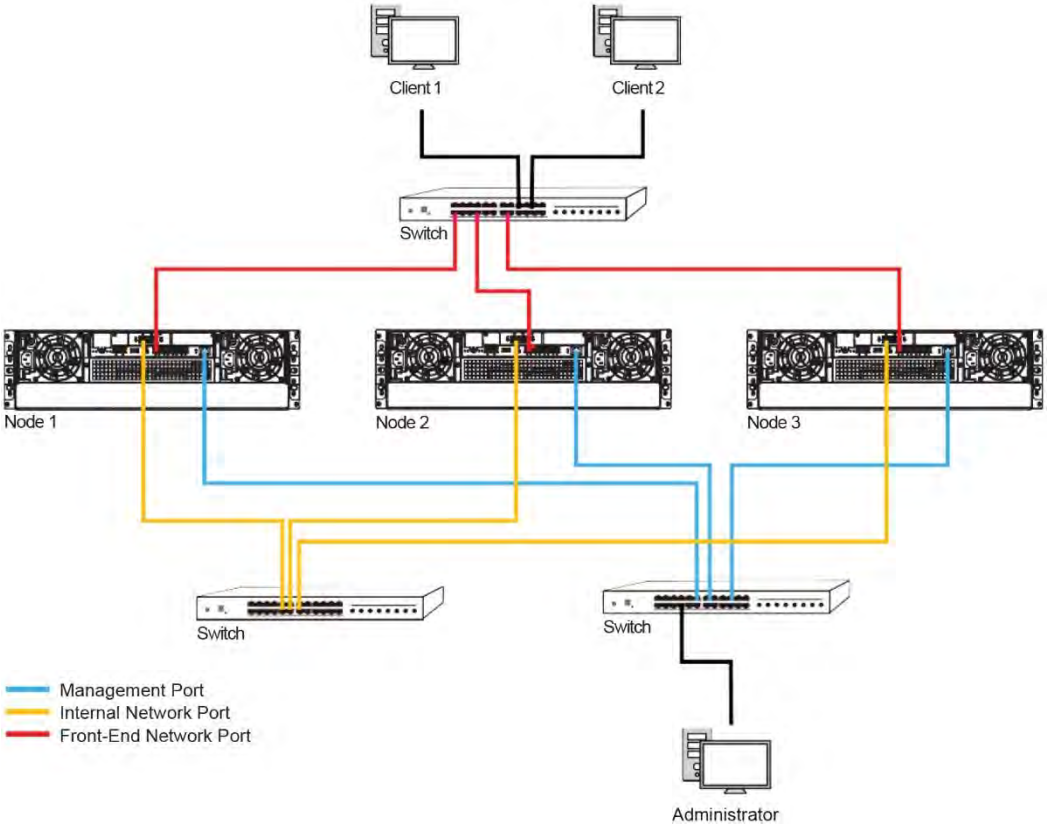

To deploy a cluster:

1. For the client side, connect one switch to the front-end network ports of the nodes.
2. For the administrator side, connect one switch to the management ports of the nodes.
3. For the connection between nodes, connect one switch to the internal ports of the nodes.
4. Choose any node as the master.
    a. Press its Mute/Service button for about 6 seconds. Then release the button and the Service LED will blink in white light.
    b. Make sure the Service LED blinks in white light. Open a browser and enter the IP: http://10.10.0.1:8098
    c. Start the deploy process of the cluster. Refer to the **PS Scale-Out NAS Installation Guide** on the CD bundled in the package for detailed information.

NOTES:

- The maximum number of nodes in a cluster is 144.
- Only one node can be designated as the master in a cluster system. When more than one node is set as the master, it may cause the deployment to fail or the cluster system to operate abnormally.
- If you want to reset the master, you can unplug the ethernet LAN RJ-45 cables of those nodes that are not supposed to be masters. Plug the cables back in, then the master is reset.

Power Connection

Before connecting to a power source, ensure that all components are properly installed and the management interfaces are properly connected.

Take a look at the list below and check the following:

- All hard drives are correctly installed to the drive trays.
- Install all hard drives into the enclosure to set up a cluster.
- The system is connected to host computers, management computers, or front-end networking devices with the correct cables.

IMPORTANT! Ensure to use the power cables with at least 1.2 meters in length. DO NOT use extension cables as the power cables are designed to connect **ONLY and DIRECTLY** to relocatable power taps (RPTs) on server cabinets.

- Ensure that the ambient temperature is not more than 35ºC (with CBM).

Connecting to Power Source

Use the bundled power cables and connect them to the power sockets for both PSUs.

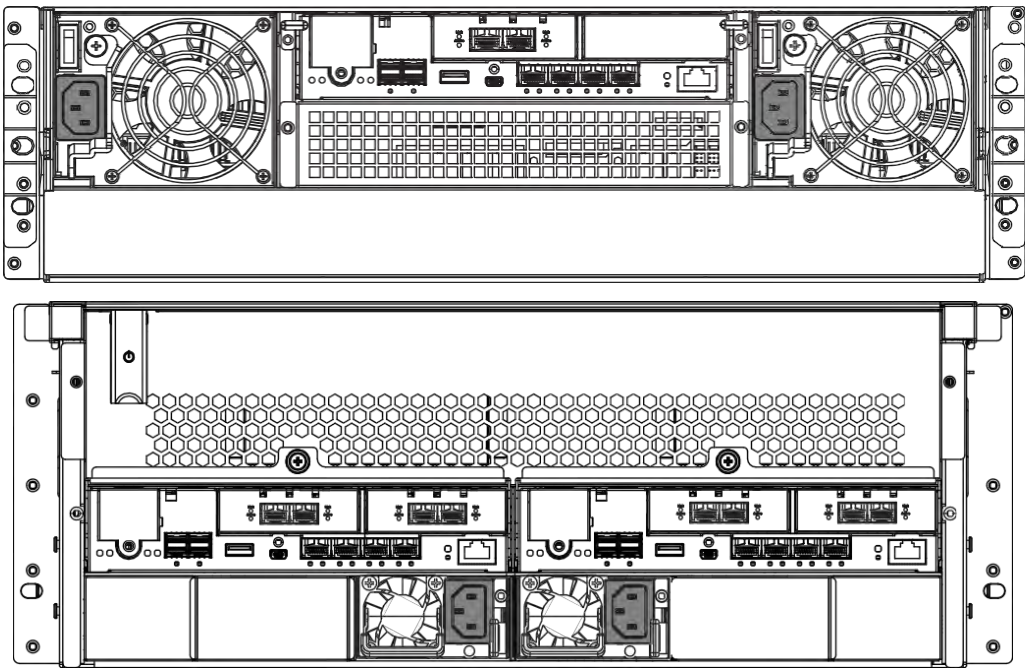

Turning on the System

Before turning on the PS Scale-Out NAS system, you must turn on the expansion enclosures first if your network configuration consists of multiple arrays.

To turn on the system:

1. Turn on the networking devices.
2. Turn on the JBOD expansion systems.
3. Press the power switches located at the rear panel.

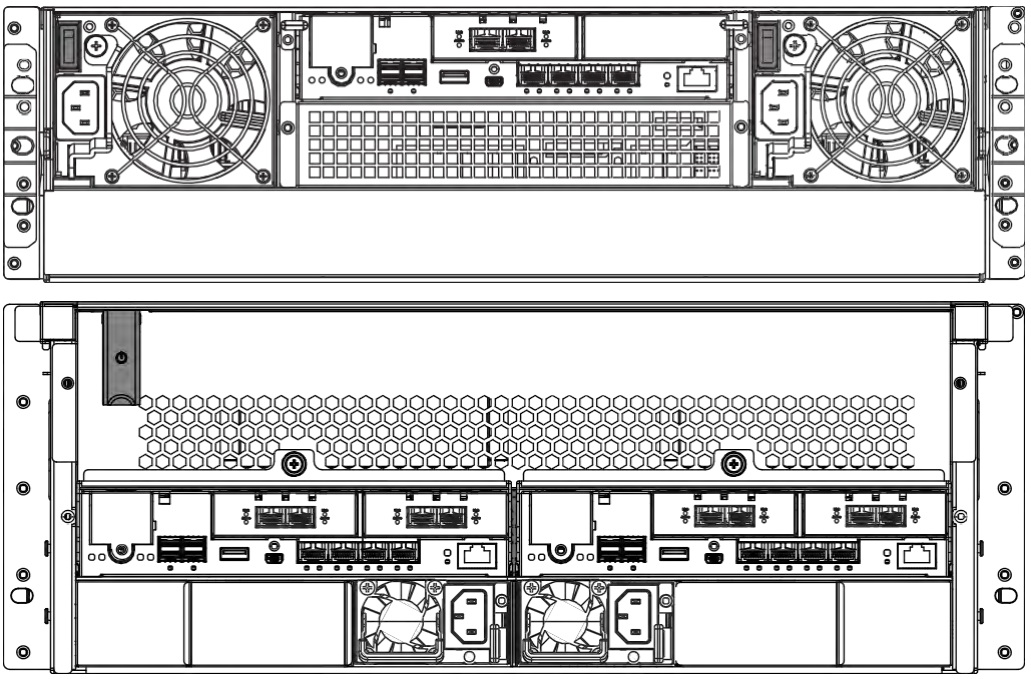

4. Turn on the application servers.

Checking the Power Status

Once the system is on, no LEDs should light up in amber or red, nor should you hear an alarm from the system. Start verifying the system status via the following interfaces:

- **Front Panel LEDs**

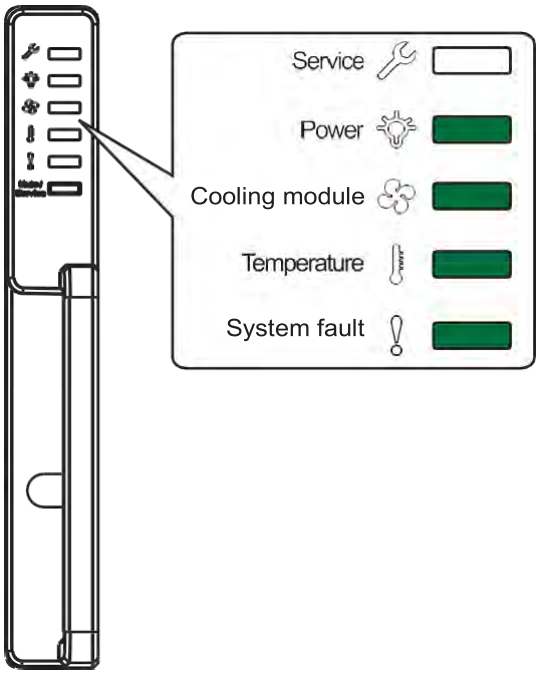

- **PSU LED**

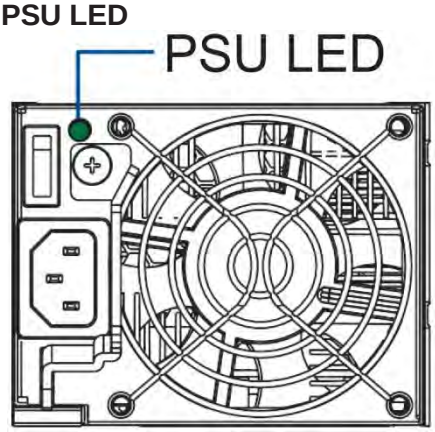

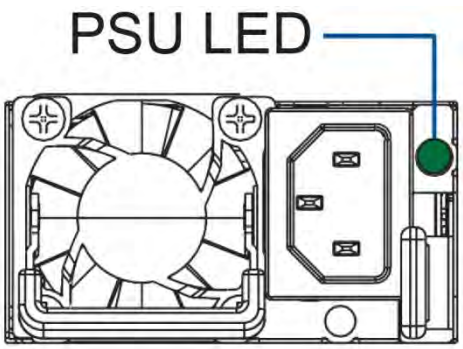

- **Controller Module LEDs**

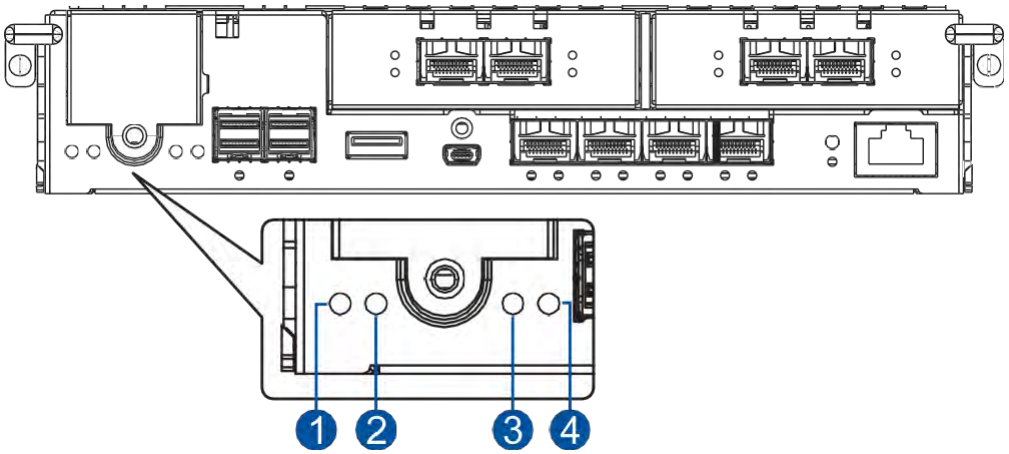

Number	LED Name	Color/Status
1	Control Status	Green
2	CBM Status	Green
3	Cache Dirty	**OFF**
4	Host Busy	**OFF**

NOTE: Refer to **System Monitoring** for more information regarding the LED description.

Turning Off the System

Before turning off the system, ensure that no processes are taking place such as **Regenerate Logical Drive Parity** or **Media Scan**.

To turn off the system:

1. Close all applications to stop the I/O access to the system.
2. Flush the cache to clear the DRAM data. If the DRAM contains cached data, the Cache Dirty LED lights up in amber.
3. Flush all cached data using the controller's shutdown function to prepare the RAID system for a safe power shutdown. Refer to the PAC Management Software manual for details.
4. Once the cache is flushed, switch off the system.

System Monitoring

This chapter details the monitoring features and the status of the PS Scale-Out NAS Series systems.

Monitoring Features

The PS Scale-Out NAS Series system is equipped with self-monitoring features that help you keep track of the system's operating status.

You can monitor your system's status with the following features:

- **Firmware**

  The firmware manages the controllers of the system, which is accessible in a terminal program via the serial port.

- **PAC Management Software**

  The PAC Management Software is a browser-based GUI software that you can install onto a local or remote computer and access via the network. You can refer to the PAC Management Software manual in your bundled CD for more information.

- **LEDs**

  The LEDs are indicators that notify you of the system status, events, and errors or failed operations. The LEDs are located on both front and rear panels of the chassis.

- **Audible Alarms**

  The audible alarms are triggered in case of system failures.

LEDs

This section details the system LEDs and their descriptions.

Front Panel

- **Front Panel LEDs**

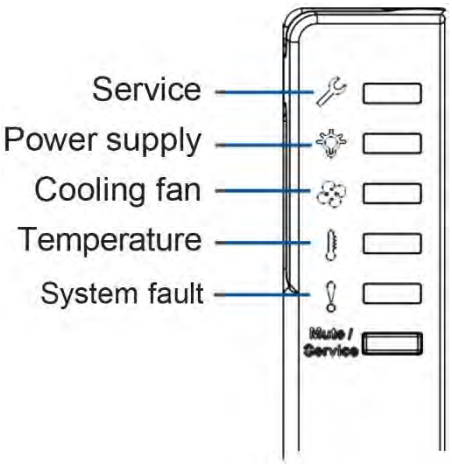

Color/Status	Description
	The system is operating normally.
	• The controller cannot be detected. • Wrong BIOS seft-test • Memory is not installed.
	The system memory is not enough.
	The system boot failure
	The PSU is faulty.
	The cooling fan built with the PSU or the cooling fan inside the enclosure is faulty.

Color/Status	Description
	The system temperature is too high.
	The cooling fan is faulty and the system temperature is too high.

Drive Tray LEDs

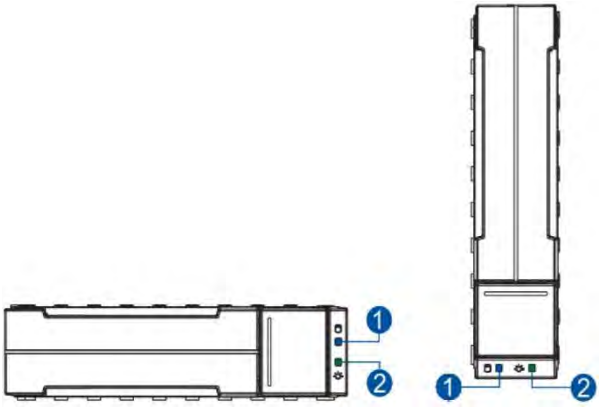

There are two LEDs on the tray that indicate the status of your drives. When you get notified by a drive failure message, you must check the drive tray LEDs to find the correct location of the failed drive.

Number	LED Name	Color/ Status	Description
1	Drive Busy		Data is being written or read from the drive. The drive is busy.
			Data is being written or read from the drive. The drive is extremely busy.
		OFF	The hard drive is plugged in but there is no activity going on.
2	Power Status		The drive bay is occupied and working normally.
			Disk drive failed or connection problem occurred.

Rear Panel

- **Controller Status LEDs**

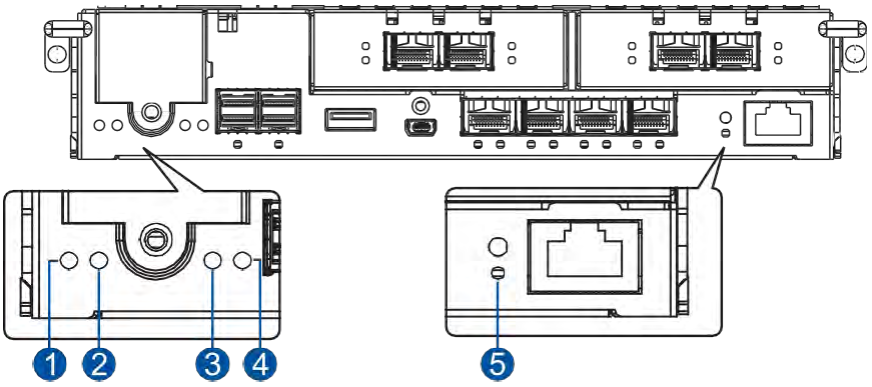

Number	LED Name	Color/ Status	Description
1	Control Status	●	A controller is operating normally.
		●	• A component has failed or inappropriate RAID configurations cause system faults. • The controller is initializing.
2	CBM Status	●	• Super capacitor and FBM (flash backup module) are installed in the system. • The CBM is ready for operation.
		●	• The CBM failed in operating, either the super capacitor or FBM. • Either the super capacitor or FBM is missing.
		⚡	The super capacitor is charging.
3	Cache Dirty	●	• Cache memory is dirty. • Data in FBM is flushed to the cache. • Errors occurred with cache memory (ECC errors). • Data is flushed from FBM to drive when the power is restored. • The super capacitor temperature reading is abnormal (out of 0 to 35°C range). • The super capacitor is not present.
		⚡	The cached data is being transferred to the FBM after a power outage. Once the transfer is done, all LEDs will turn off. This signal is local to each controller.
		OFF	The cache is clean and the super capacitor can sustain the memory in case of power loss.
4	Host Busy	●	Traffic is going on the host bus.
		OFF	No traffic is going on the host bus.
5	Restore Default	●	Successfully reset the controller after pressing and holding the Restore Default button.

- **12Gb/s SAS Expansion Port LEDs**

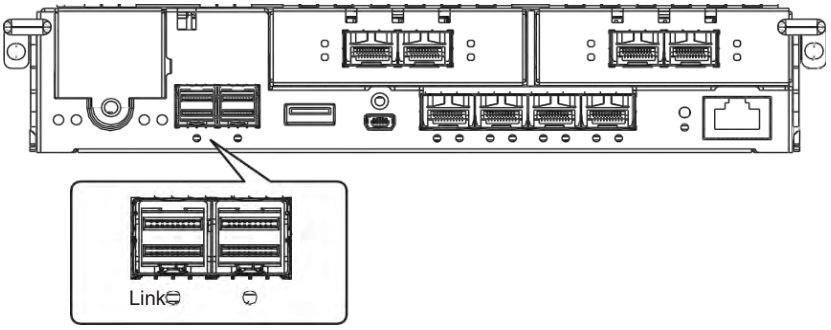

LED Name	Color/Status	Description
Link/Active	●	All 4 PHY links are validly linked.
	⚡	Less than 4 PHY links are connected (at least one of the PHYs has failed).
	OFF	All 4 PHY links are offline.

- **10GbE Port (SFP+) LEDs**

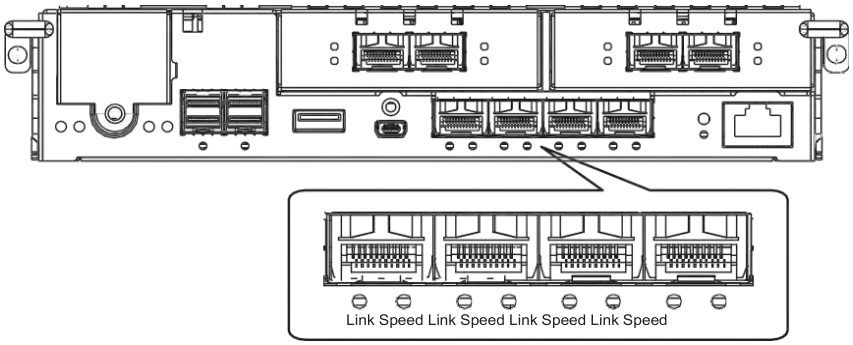

LED	Color/Statu	Description
Link/Activ	●	A connection is established.
	⚡	Data I/O is ongoing.
	OF	No connection is established.
Spee	●	10Gb connection is
	OF	

- **1GbE Management Port (RJ-45) LEDs**

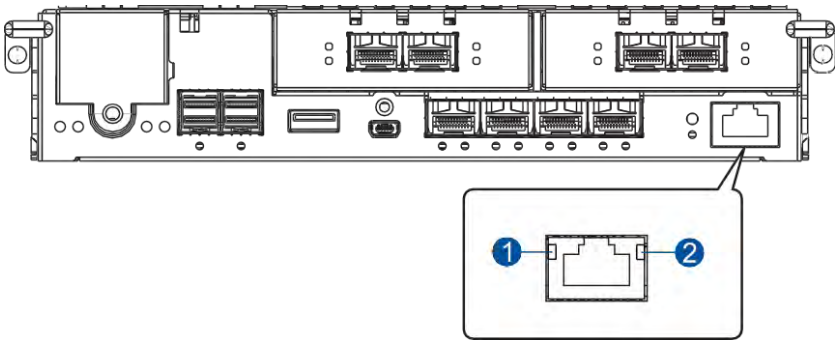

Number	LED Name	Color/ Status	Description
1	Speed	●	1Gb connection is established.
		OFF	10/100Mb connection is established.
2	Link/Active	●	A connection is established.
		⚡	Data I/O is ongoing.
		OFF	No connection is established.

- **Host Board 25GbE Port (SFP28) LEDs**

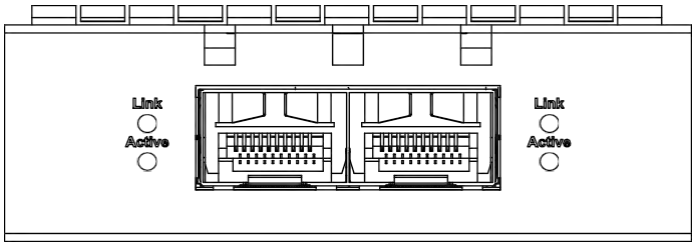

LED name	Color/Status	Description
Link		A connection is established.
	OFF	No connection is established.
Active		Data I/O is ongoing.
	OFF	No Data I/O.

- **Host Board 40GbE Port (QSFP+) LEDs**

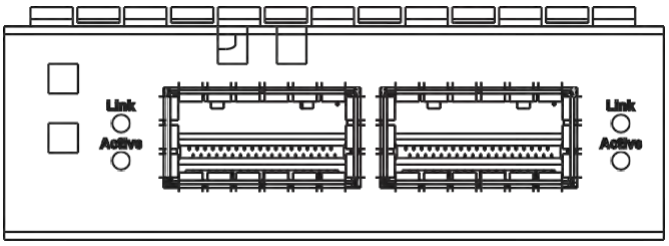

LED Name	Color/Status	Description
Link		A connection is established.
	OFF	No connection is established.
Active		Data I/O is ongoing.
	OFF	No Data I/O.

- **PSU LED (for PS 6316/6324/6416/6424/6425)**

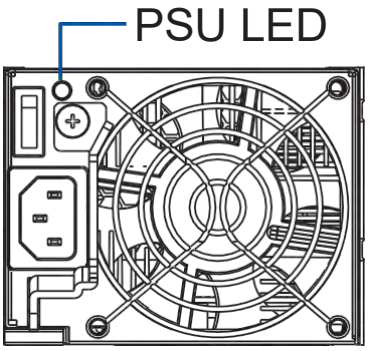

Color/Status	Description
	The system is connected to the power source, but the system is not turned on.
	The PSU is operating normally.
	• The PSU is faulty. • Over Voltage Protection (OVP)/Over Power Protection (OPP)/Over Current Protection (OCP) is activated. • The fan built with the PSU is faulty.
OFF	The system is not connected to the power.

PSU LED (for PS 6360/6460)

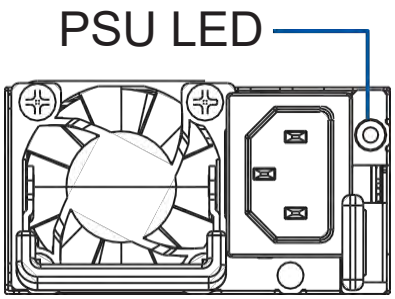

Color/Status	Description
	• The system is connected to the power source but the system is not turned on. • The PSU firmware is updating.
	The PSU is operating normally.
	• The PSU is faulty. • Over Temperature Protection (OTP)/Over Current Protection (OCP)/Under Voltage Protection (UVP)/Over Voltage Protection (OVP) is activated. • The fan built with the PSU is faulty.
	The power supply warning events such as high temperature, high power, high current (12V), or slow fan occurs while the power supply confinues to operate.
OFF	The system is not connected to the power.

The PSU LED alerts you of the current status of your PSU components. When either of the components fail, you must replace the PSU immediately.

WARNING! Keep your fingers away from moving parts of the system to prevent technical mishaps and physical injuries.

NOTE: For more details, see section **Replacing the PSU/Cooling Module**.

- **JBOD 12Gb/s SAS Expansion Controller LEDs**

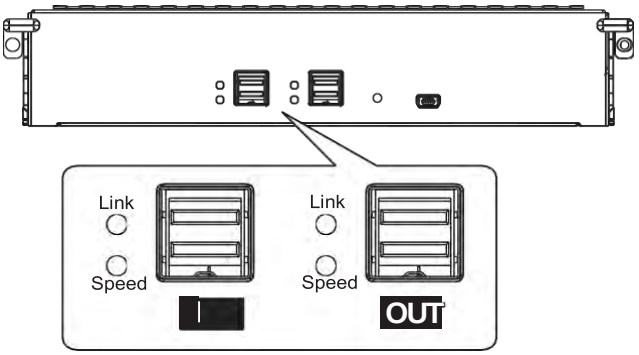

PS16J3

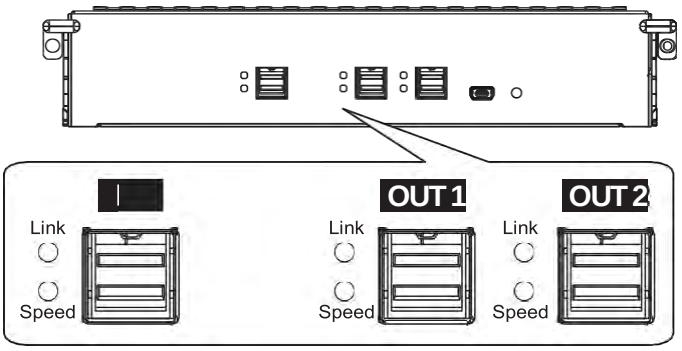

PS60J4

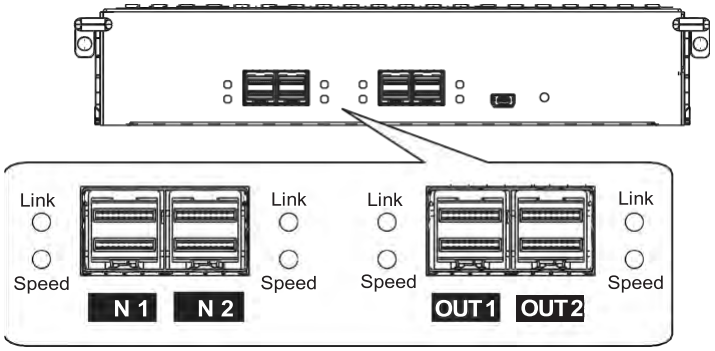

PS25FJ2

LED Name	Color/Status	Description
Link		All PHYs are validly linked.
		One of the PHYs has failed.
	OFF	All PHYs are offline.
Speed		12Gb/s link speed
		6Gb/s or 3Gb/s link speed
	OFF	No connection

Alarms and I²C Bus

This section details the system alarms and I²C Bus.

Audible Alarms

You will hear an audible alarm if any of the following components fail:

- Cooling Modules
- PSU Modules
- Hard Disk Drives
- Sensors or Presence Detection Circuitries

If you hear an audible alarm, ensure to read the error message on the terminal or the PAC Management Software screen to determine the cause of the alarm. Take appropriate actions to solve the problem. You can turn off the alarm using the mute button on the front panel.

NOTE: When the temperature exceeds the preset threshold, the controller's charger circuits stop charging. You will receive a message that says *Thermal Shutdown/Enter Sleep Mode.* When the temperature falls back to the normal range, the supercapacitor resumes charging.

I²C Bus

The operating status of the PSU and cooling modules are collected via the I²C serial bus. If either of the modules fail, the system detects the failure and you will be notified via the same methods stated in audible alarms.

System Maintenance

This chapter provides maintenance and replacement procedures of replaceable components of your PS Scale-Out NAS Series systems.

Replaceable Components

Your PS Scale-Out NAS Series system is comprised of replaceable components:

- PSU/Cooling Module
- Controller Module
- Memory Module
- Host Board
- CBM
- Hard Disk Drives

WARNING!

- DO NOT remove a defective component from the system until you have the replacement on hand. Doing so may disrupt the internal airflow.
- Consult with a qualified engineer who is familiar with the system to recommend the proper component replacements.
- DO NOT use excessive force when installing a replaceable module. Forced installation of the module can damage the connector pins of the system, the module, or the internal backplane.

Replacing the PSU/Cooling Module

Replace the defective PSU/Cooling Module immediately, but only if you have the replacement.

WARNING! Although the system can still operate with a defective PSU, it is not recommended to use it for an extended period of time.

IMPORTANT! You must shut your system down before replacing the PSU/Cooling Module.

To replace the PSU/Cooling Module (for PS 6316/6324/6416/6424/6425):

1. Shut the system down, turn the PSU off, then unplug the power cord.
2. Loosen the retention screw that secures the extraction level to the chassis.

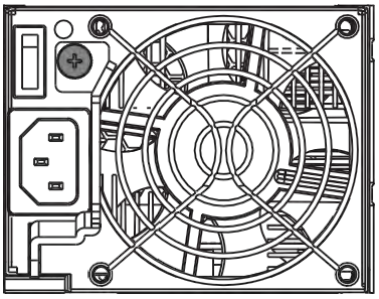

3. Pull down the extraction lever to dislodge the PSU/Cooling Module from the backplane connectors, then gently pull the PSU/Cooling Module from the system. If the system is mounted to the rackmount, carefully support its weight with the rack while removing the module.

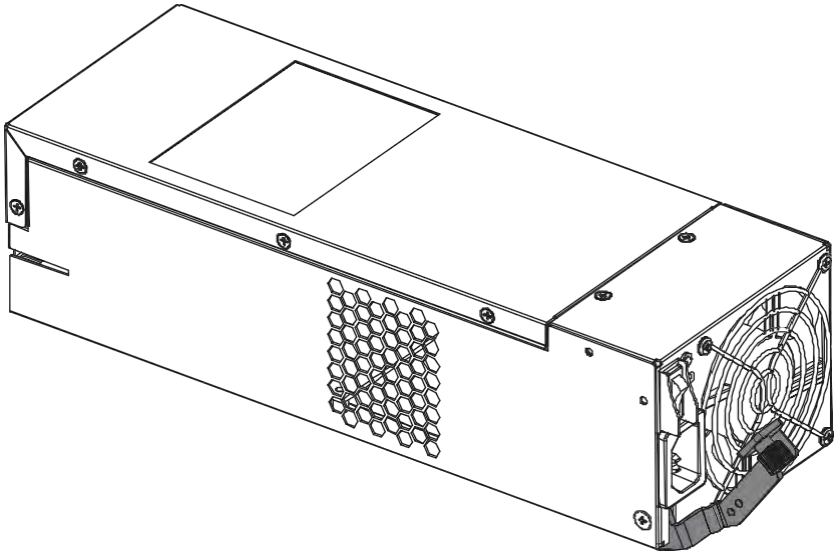

4. Insert the replacement PSU/Cooling Module with the extraction lever pointing outwards, then push into the chassis. When you feel a resistance, push the extraction lever to lodge the PSU/Cooling to the backend connectors.

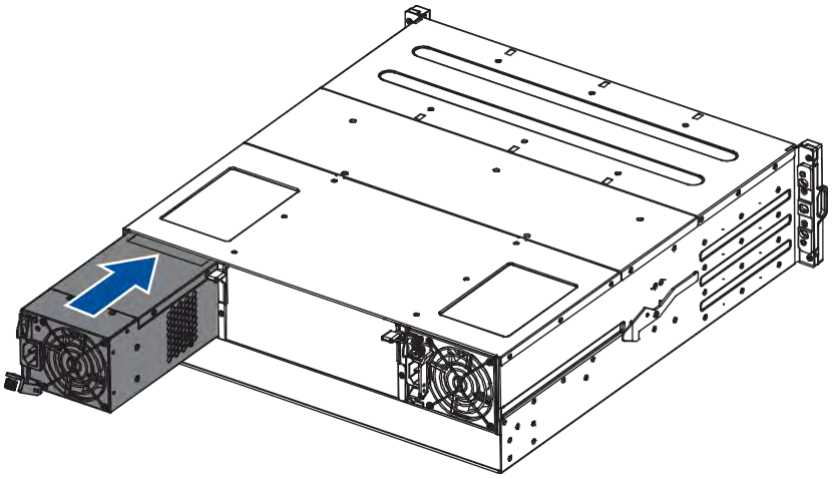

NOTE: This enclosure illustration is for reference only.

5. Fasten the retention screw.
6. Reconnect the power cord.
7. Power on the PSU module.

To replace the PSU/Cooling Module (for PS 6360/6460):

1. Shut down the system, turn the PSU off, then unplug the power cord.
2. Loosen the screws that secure the PSU to the chassis.

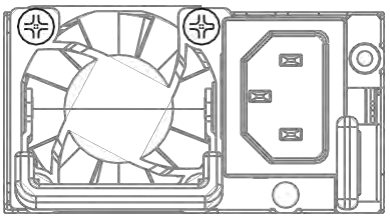

3. Press the retention lever to the left (A) then pull out the extraction handle (B).

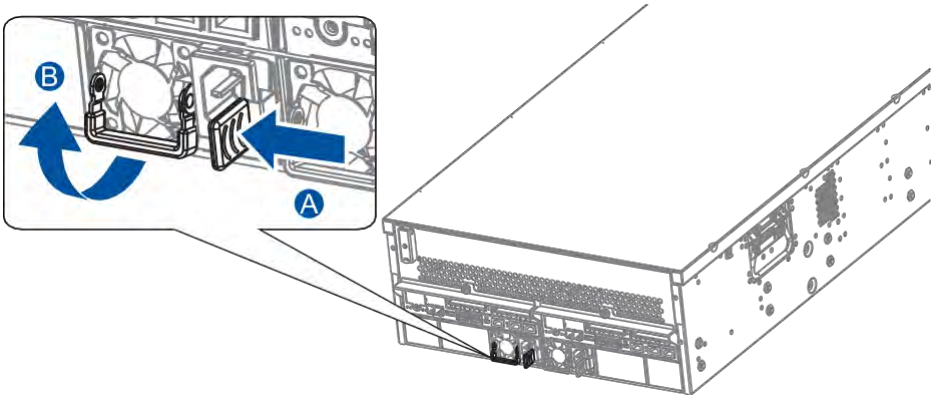

4. Hold the extraction handle then pull gently to remove the PSU from the system.

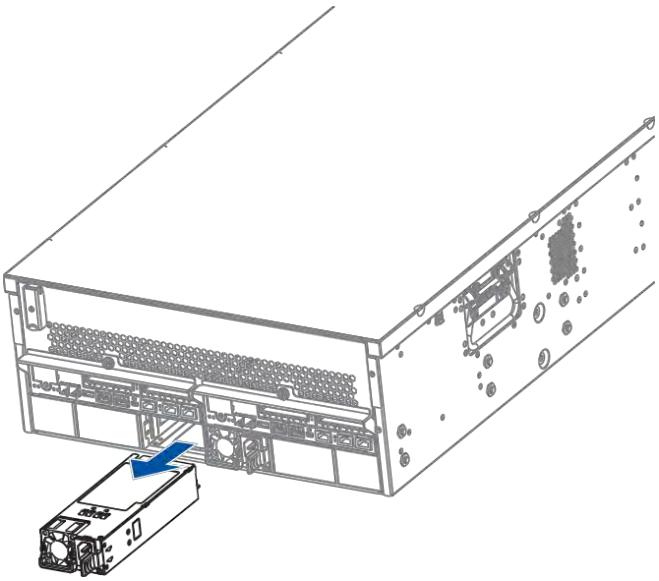

5. Insert the replacement PSU into the enclosure then push it gently. When you feel a resistance, push the module to lodge the backend connectors. Once lodged, the retention lever clicks back into place.
6. Fasten the PSU to the system using the screws that you removed in step 2.
7. Connect the power cord.
8. Turn the system on.

To replace the cooling module in the enclosure (for PS 6360/6460):

1. Shut down the system, turn the PSU off, then unplug the power cord.
2. Remove the front cover of the enclosure (A). Loosen the screws that secure the top cover (B). Gently slide the top cover forward then lift it up (C).

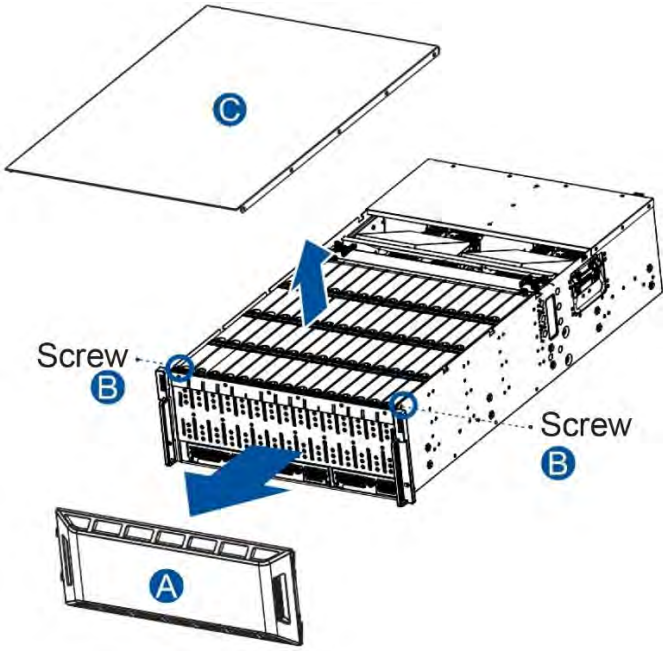

3. Loosen the thumb screws that secure the cooling module to the enclosure.

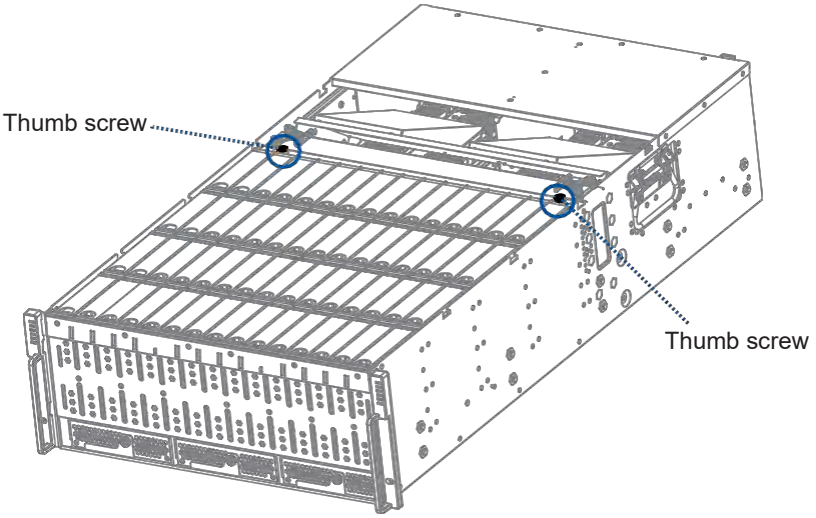

4. Lift up the extraction handles and pull out the cooling module from the enclosure.

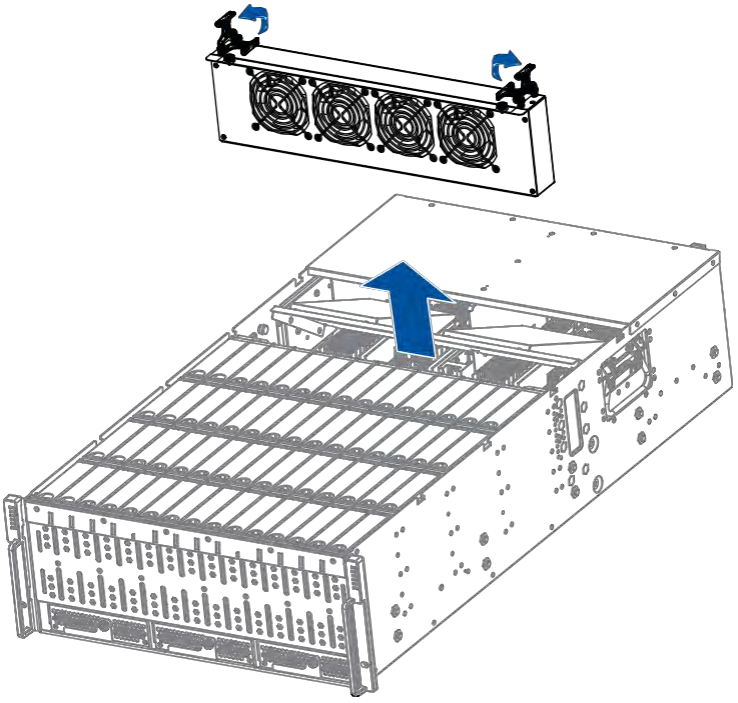

5. Insert the replacement cooling module into the enclosure.
6. Tighten the thumb screws to secure the cooling module to the enclosure.
7. Close the top cover of the enclosure.
8. Connect the power cord.
9. Turn the system on.

Replacing the Controller Module

Use the PAC Management Software to find out the firmware version of the present controller. From the PAC Management Software GUI, go to **Storage Manager > Information > Enclosure View.**

WARNING! DO NOT use controller modules from different models. Each controller module has a unique ID which is applied to the host port names. If you insist on using other models' controller modules, you may encounter SAN problems on multiple systems.

IMPORTANT! Shut down the applications and the system first when replacing the controller.

NOTE: Refer to the PAC Management Software user manual for more details.

To replace the controller (for PS 6316/6324/6416/6424/6425):

1. Disconnect all cables from the controller that you want to replace.
2. Loosen the screws that secure the controller to the chassis.

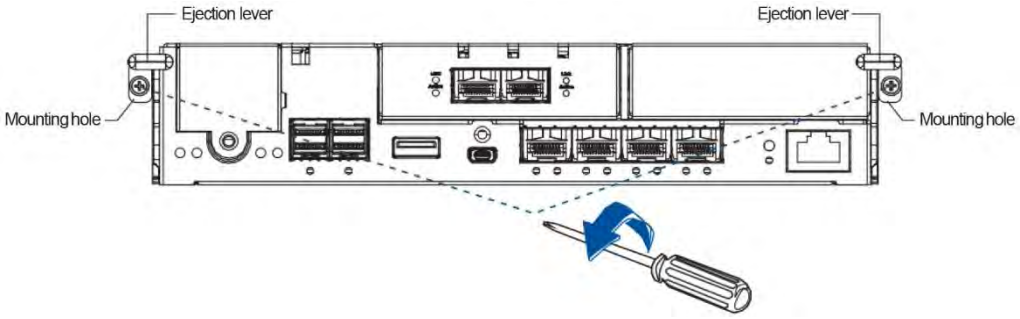

3. Push the ejection levers downwards to dislodge the controller from the system (A), then pull to remove from the enclosure (B).

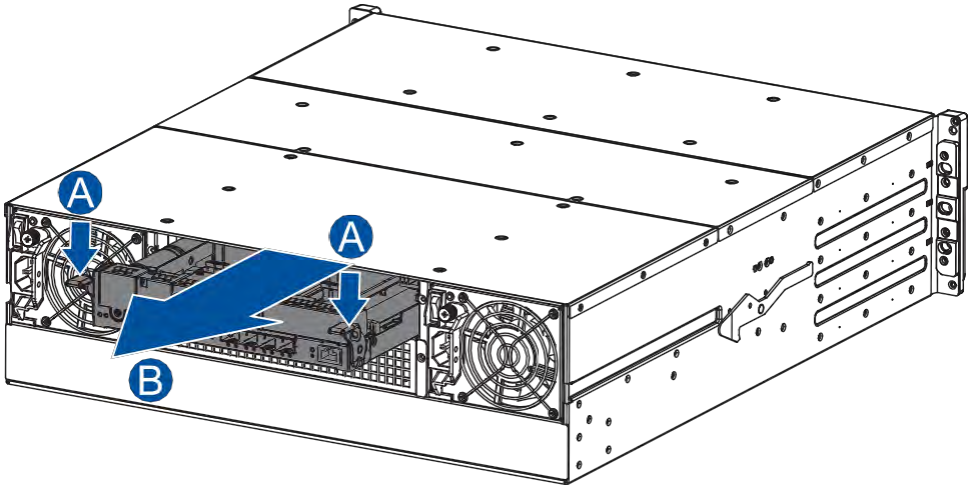

4. Insert the replacement controller carefully into the controller module slot (A). When you feel a contact resistance, use a small but careful force and push the ejection levers upwards to secure the controller to the enclosure (B).

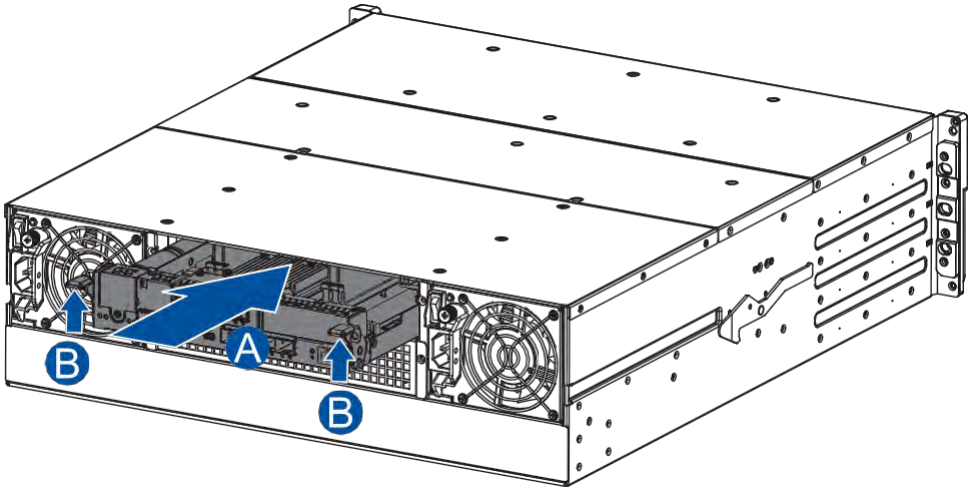

5. To secure the controller to the chassis, fasten two retention screws to the controller's mounting holes under the ejection levers.

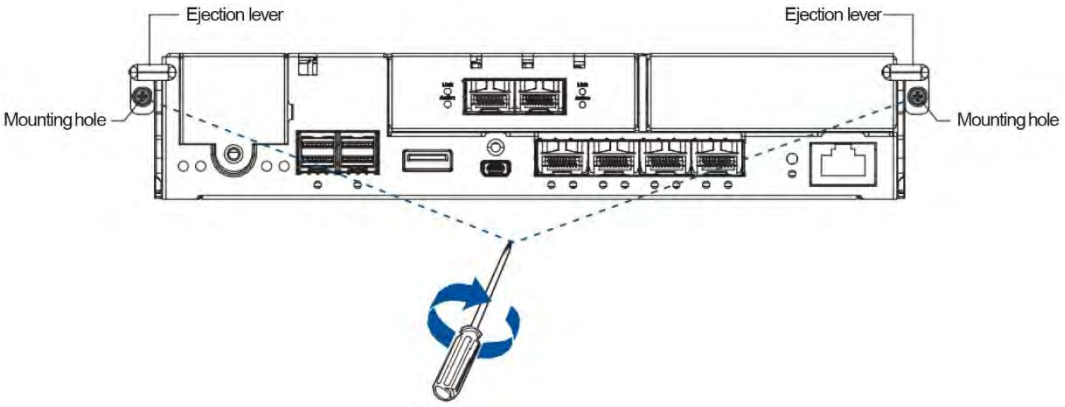

6. Reconnect the cables to the controller's ports.
7. Power the system up. Check the messages on the system's LCD panel, PAC Management Software, or firmware utility. The power LEDs turn on when the system is successfully initiated online.
8. Restore NVRAM data. From your firmware, look for **Restore NVRAM from Disks** or **Restore NVRAM from Files** to restore your previous ID/LUN mapping configuration.

To replace the controller (for PS 6360/6460):

1. From your system's software, go to **Main Menu > System Functions > Shutdown Controller** function to stop all I/O access to the system and the cached data are distributed to the disk drives.
2. Shut the system down, switch the power buttons off, and unplug the power cords from the PSUs.
3. Disconnect all cables from the controller module that you want to replace.
4. Unfasten the retention screw of the controller module that you wish to replace.

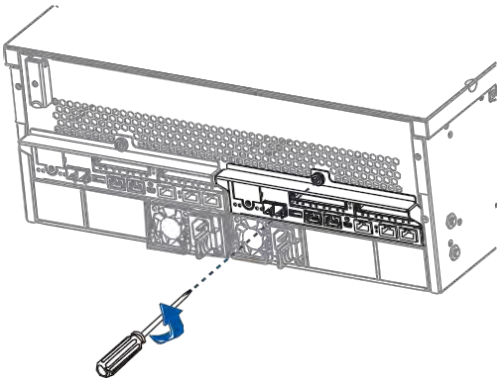

5. Hold the rim, then pull the controller out of the enclosure.

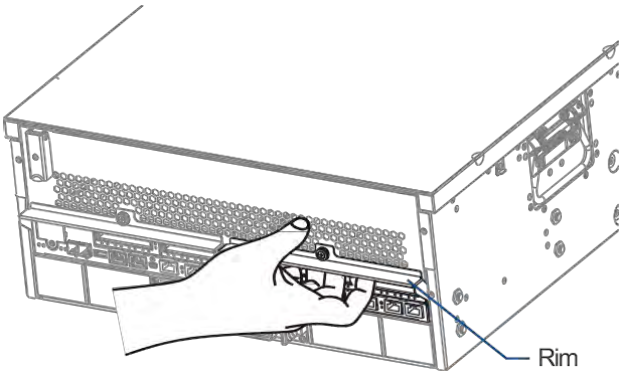

6. Insert the replacement controller carefully into the module slot. When you feel a contact resistance, push the controller with a small but careful force, then secure the replacement controller to the enclosure with the retention screw you removed in step 4.
7. Attach the cables.
8. Turn the system on, then check the system message on the PAC Management Software or the firmware utility.

NOTE: Once the replacement controller becomes active online, the Control Status LED lights up in green. See section **Controller Status LEDs** for details.

9. Restore the previous ID/LUN mapping settings that you set using the following steps:
    a. Restore NVRAM from Disks
    b. Restore NVRAM from Files.

Replacing the Memory Module

The controller comes with a pre-installed DRAM module(s). You can upgrade or replace it when the bundled module malfunctions.

IMPORTANT!

- We strongly recommend you NOT to use the removed DRAM module from a failed controller of a different storage system.
- Contact your system vendor to help you purchase the compatible DRAM modules.
- When removing/installing a memory module, ensure that you shut down all applications and the system.

NOTE: Refer to section **ESD Precautions** for safety information.

To replace the memory module:

1. Remove the controller that contains the memory module you want to replace.

NOTE: See section **Replacing the Controller Module** for details.

2. Look for the DIMM slots in the controller.

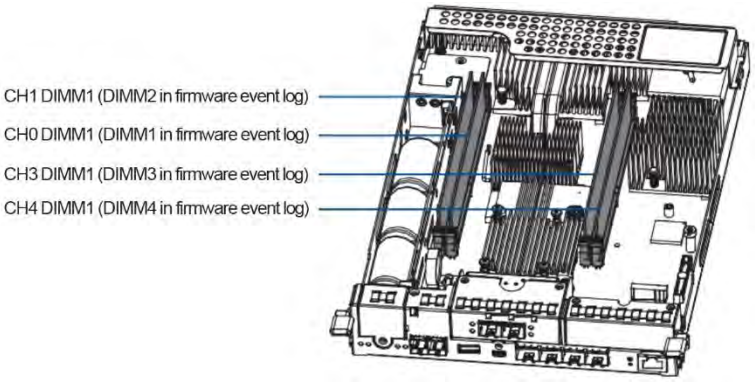

IMPORTANT! When installing memory modules, please fill CH0 DIMM1 and CH3 DIMM1 slots first.

3. Push the clips down to release the DRAM modules from the DIMM socket.

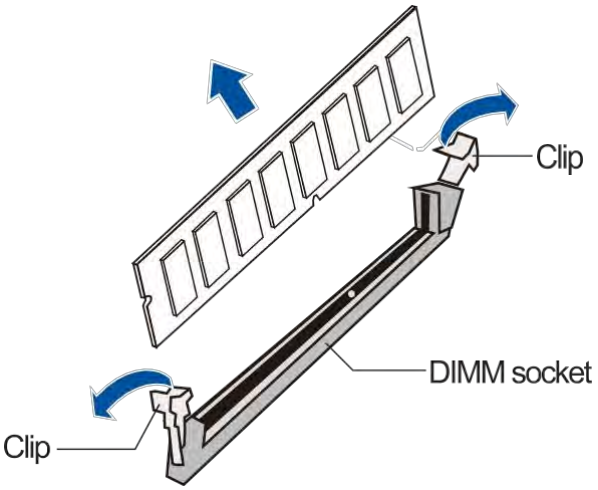

4. Insert the replacement DIMM carefully into the DIMM socket, with the DIMM's notch aligned to the DIMM socket's notch guide.

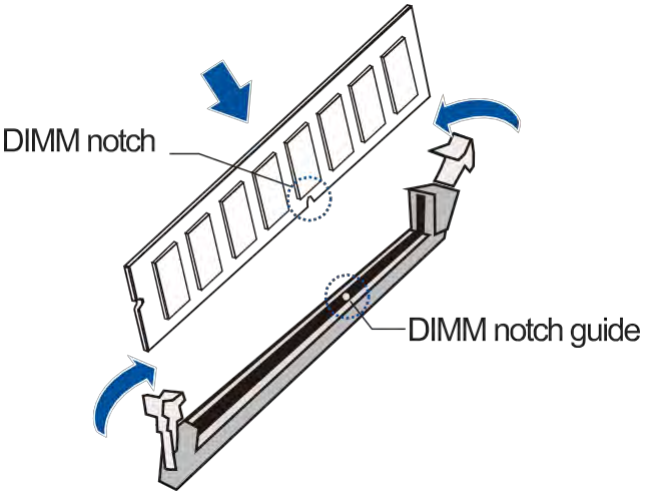

5. Reinstall the controller back into the enclosure.

Replacing the Host Board

Before replacing the host board to the controller, you must take note of the following considerations:

- A controller/host board downtime may occur if you replace a host board for an upgrade.
- The firmware automatically restores the system to its factory settings when adding or replacing a host board.

To replace the host board:

1. Remove the controller from the enclosure.

NOTE: See section **Replacing the Controller Module** for details.

2. Loosen the screw that secures the host board to the controller, push the release lever, then lift to remove the host board.

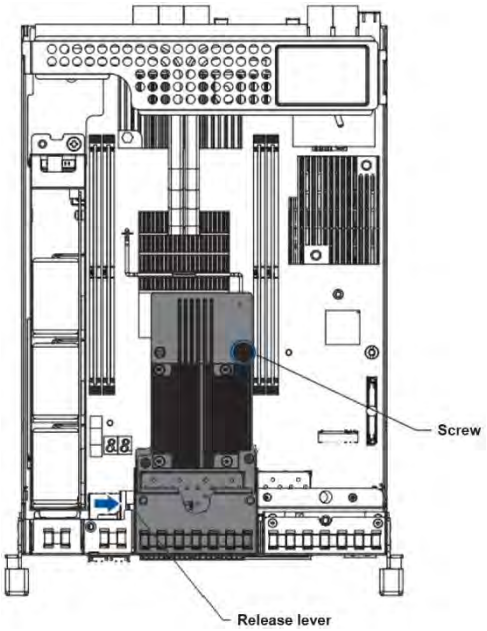

3. Use the guide pin to position the new host board to the host board slot, place it carefully (A), then tighten the thumb screws to secure the host board in place (B).

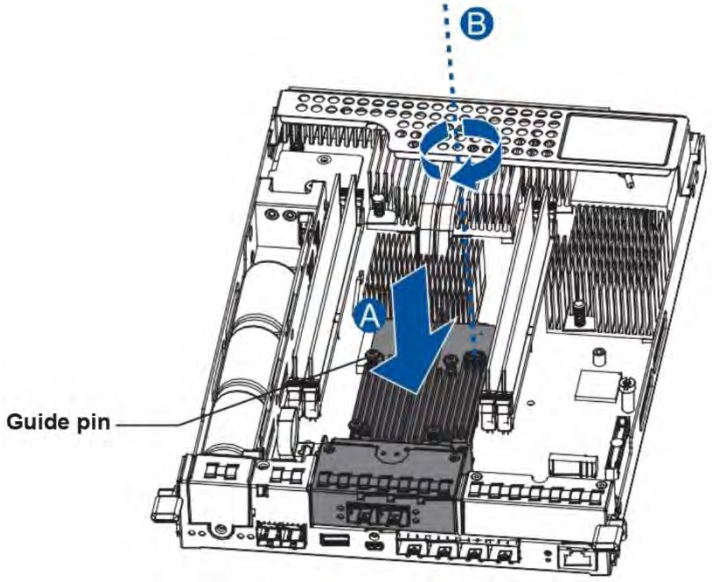

4. Reinstall the controller back to the enclosure.

Replacing the Cache Backup Module (CBM) Components

The CBM is comprised of a supercapacitor and the Flash Backup Module (FBM). The supercapacitor allows your controller to provide more power during a power outage, supporting the controller to save the data to the FBM.

WARNING! Ensure that you have the replacement on hand before replacing your current CBM.

Supercapacitor Fault Conditions and Precautions

If a supercapacitor leaks, gives off a bad odor, generates abnormal amounts of heat, becomes discolored or deformed, or appears abnormal when charging or storing, remove it from the system immediately.

These issues may be due to the following:

- The temperature sensor on the system's charger circuit reports a temperature that exceeds the preset threshold. The charger circuit enters a low power and self-protection state.
- A supercapacitor module has been charged for more than 10 minutes. When this occurs, the charger enters a timer fault state. Charging resumes automatically after you remove or reinstall the supercapacitor, or after you reset the system.

When reinstalling/replacing the supercapacitor, remember these precautions:

- ONLY use a replacement supercapacitor supplied by an authorized distributor. Use of other capacitors voids your system's warranty.
- ONLY dispose your used/defective supercapacitor at an authorized battery disposal site.
- DO NOT place the supercapacitor near a heat source.
- DO NOT immerse/submerge the supercapacitor in water or other liquids.
- DO NOT disassemble or modify the supercapacitor.
- DO NOT pierce, strike, throw, or exert pressure on the supercapacitor.

Replacing the Supercapacitor

To replace the supercapacitor:

1. Remove the controller from the enclosure.

NOTE: See section **Replacing the Controller Module** for details.

2. Loosen the screw that secures the supercapacitor to the controller (A), lift its side to a 45° angle (B), then pull to remove from the controller (C).

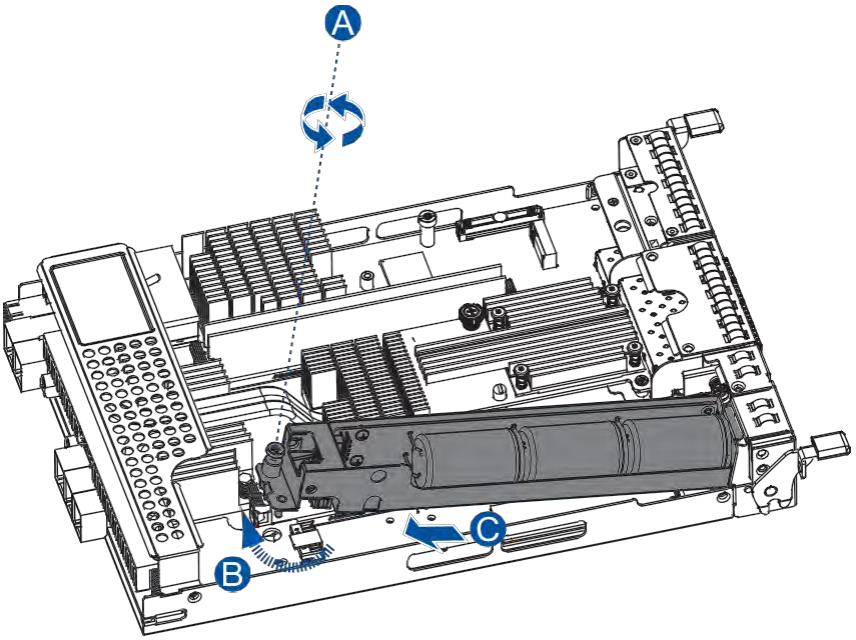

3. Install the replacement supercapacitor to the controller, then tighten the screw to secure it in place.

4. Insert the controller back to the enclosure.

Replacing the Flash Backup Module (FBM)

The FBM is located underneath the supercapacitor. To replace the FBM, you need to remove the supercapacitor from the controller.

To replace the FBM:

1. Remove the controller from the enclosure.

NOTE: See section **Replacing the Controller Module** for details.

2. Loosen the screw that secures the supercapacitor to the controller (A), lift its side to a 45° angle (B), then pull to remove from the controller (C).

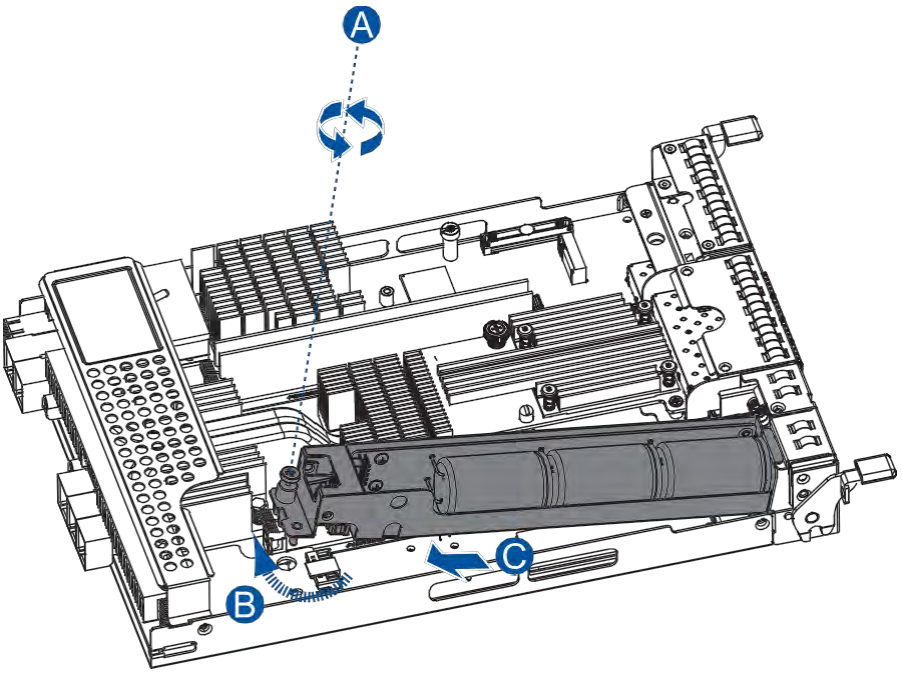

3. Remove the screw that secures the FBM to the controller (A), then remove the FBM from the FBM module slot (B).

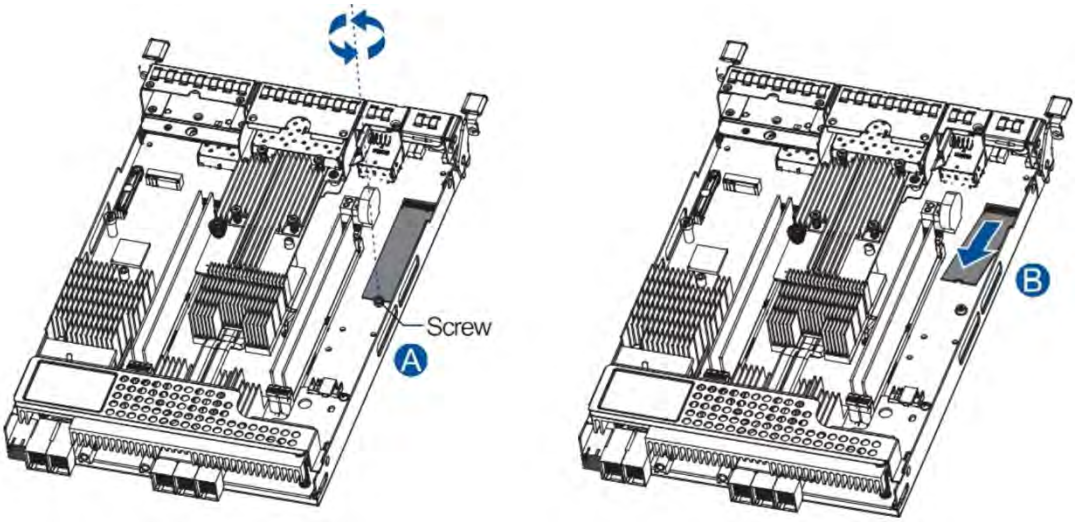

4. Orient and insert the replacement FBM's notch to the module slot's guide in a 45° angle (A), orient the screw notch on the screw hole (B), then secure the FBM to the board with the screw you removed in step 3 (C).

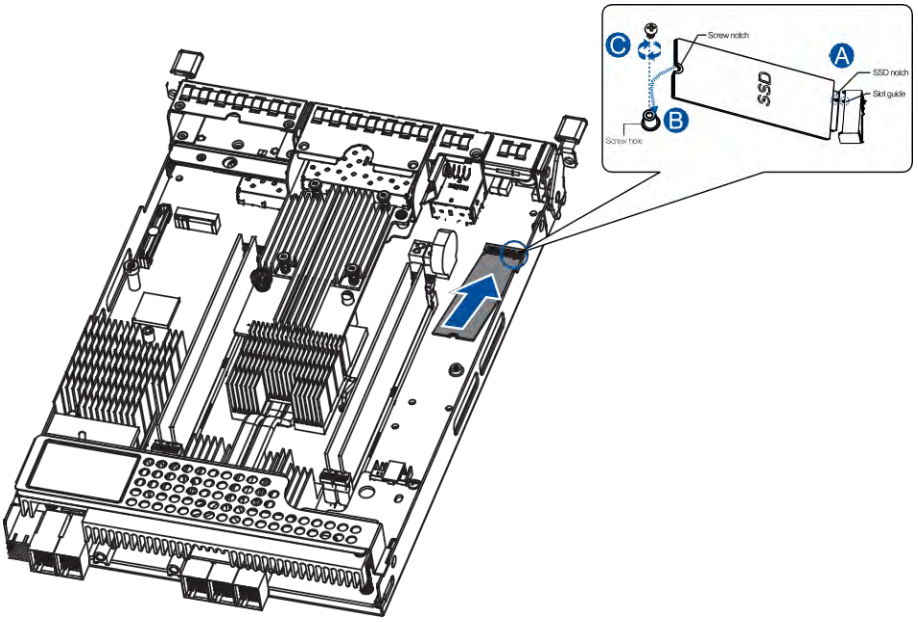

5. Install the supercapacitor back to the controller.
6. Insert the controller back into the enclosure.

Replacing the Hard Drive

WARNING!

- Ensure to have the replacement ready before replacing the hard drive. DO NOT leave the drive tray open for long periods to prevent disruption of internal airflow.
- Handle the hard drives with extreme care. Hold them by the edges and avoid touching the circuits and interface connectors.

Replacing the Hard Drive into the Drive Bay and Enclosure (for PS 6316/6324/6416/6424)

To replace the hard drive:

1. Identify the faulty hard drive using the drive tray LEDs or the PAC Management Software.

NOTE: See section **Hard Drive Designation** for the order of the drive bays.

2. When the faulty hard drive is located, push the release button to eject the drive tray, wait for 30 seconds for the drive to spin down, then pull the tray out using the spring handle.

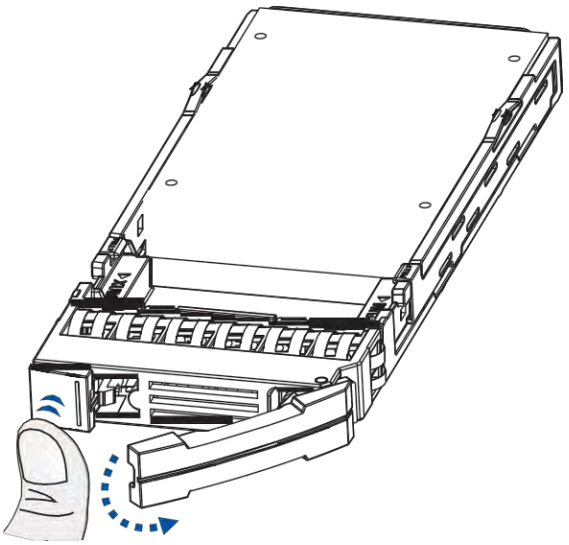

3. Remove the retention screws from the drive tray to dislodge the hard drive.

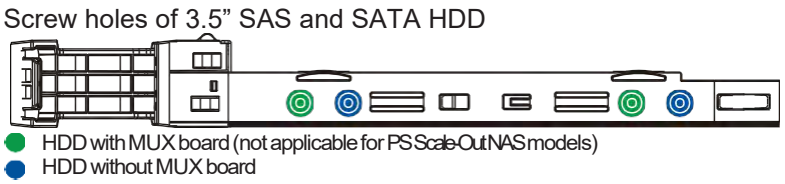

4. Install the replacement hard drive to the drive tray, then insert the assembled hard drive and drive tray to the bay with the spring handle open.

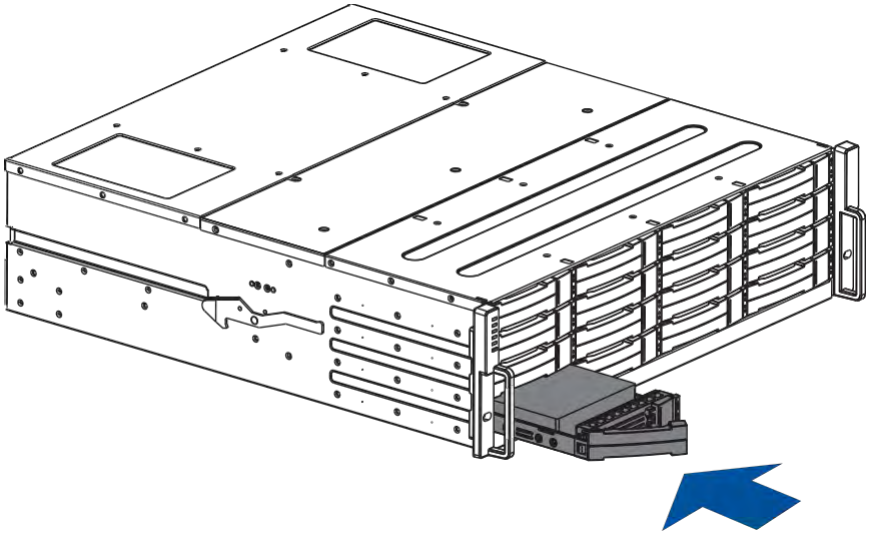

5. When the tray is fully inserted to the bay, close the spring handle.

IMPORTANT! Ensure that there is no more drive error reported.

Replacing the Hard Drive into the Drive Tray and Enclosure (for PS 6425)

To replace the hard drive:

1. Identify the faulty hard drive using the drive tray LEDs or the PAC Management Software.

NOTE: See section **Hard Drive Designation** for the order of the drive bays.

2. When the faulty hard drive is located, push the release button to eject the drive tray, then pull the tray out using the spring handle.

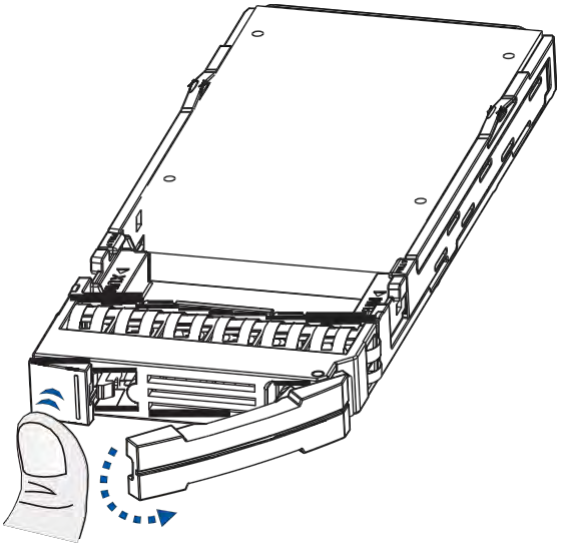

3. Remove the side clips from the tray (A) then remove the hard drive from the drive tray.

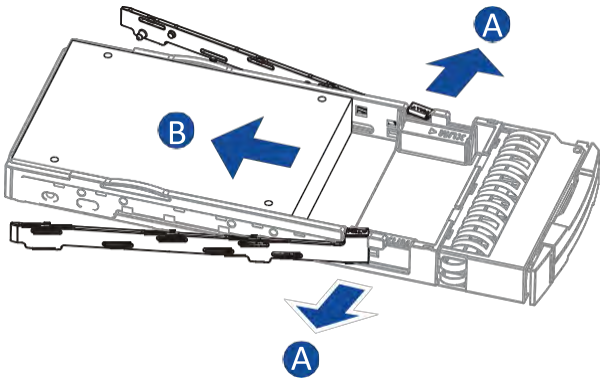

4. Place the replacement hard drive on the tray, then secure the clips to the side of the tray.

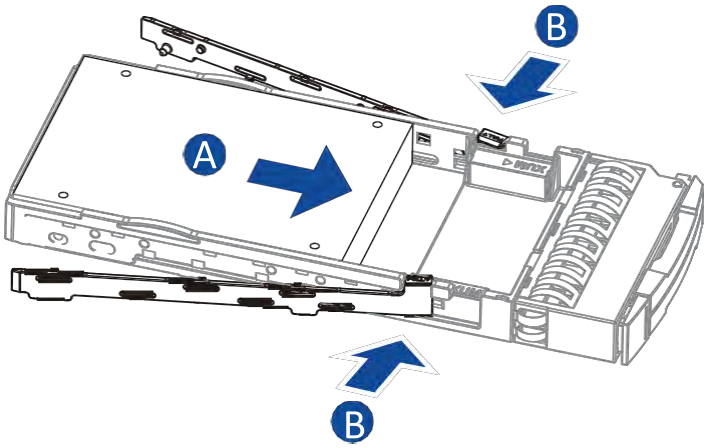

5. Insert the assembled hard drive and tray to the enclosure with the spring handle open, then close the spring handle when the drive is fully inserted to the drive bay.

Replacing the Hard Drive into the Drive Tray and Enclosure (for PS 6360/6460)

To replace the hard drive:

1. Identify the faulty hard drive using the PAC Management Software.

NOTE: See section **Hard Drive Designation** for the order of the drive bays.

2. When the faulty hard drive is located, open the top cover of the enclosure.

NOTE: See **Installing the Hard Drive into the Drive Tray and Enclosure (for PS 6360/6460)** on how to open the top cover.

3. Look for the defective hard drive, then pull up its handle plate (A) and remove the assembled drive and tray (B).

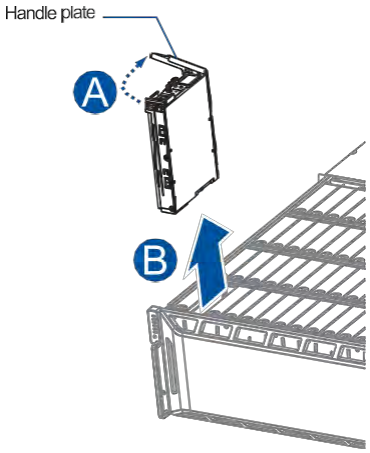

4. Take out the defective hard drive from the tray, assemble the hard drive replacement to the tray, then install the assembly back into the system.

NOTE: See section **Installing the Hard Drives** to complete the hard drive installation.

Front Panel LED Status and Response Action

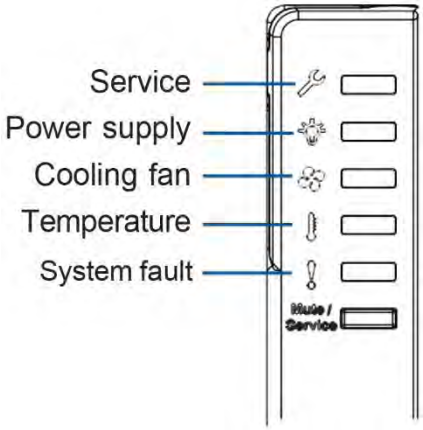

Please refer to below table to find the description of each status and its response action. Refer to section **Replaceable Components** to replace the components if needed.

Color/Status	Description	Response Action
	• The controller cannot be detected. • Wrong BIOS self-test • Memory is not installed.	Please follow below steps: 1. Shut down the system and remove the controller. Check if the memory dimms are properly installed. 2. Install the controller back and power up the system. 3. If unresolved, contact technical support.
	The system memory is not enough.	Please follow below steps: 1. Shut down the system and remove the controller. Check if the memory is 64GB or above per node and properly installed. 2. Install the controller back and power up the system. 3. If unresolved, contact technical support.
	The system boot failure	Contact technical support.

Color/Status	Description	Response Action
	The PSU is faulty.	Please follow below steps: 1. Check the PSU LEDs on the rear panel and find the faulty PSU. 2. Remove and reinstall the PSU properly. 3. If unresolved, replace the PSU. 4. If still unresolved, contact technical support.
	The cooling fan built with the PSU or the cooling fan inside the enclosure is faulty.	Contact technical support.
	The system temperature is too high.	Please follow below steps: 1. Check if the rear ventilation openings are covered. 2. Check if the ambient temperature is too high. 3. If unresolved, contact technical support.
	The cooling fan is faulty and the system temperature is too high.	Contact technical support.

Restoring Default System Settings

NOTE: Restoring default settings is a last-resort function. All configurations such as parameters and host LUN mappings will be erased.

You may need to restore default settings in the following cases:

- When the firmware update procedure requires it.
- When you need to reset the password to access the storage system.

To restore the default settings, follow these steps:

1. Stop all host I/O's.
2. Save the current configuration using **Export NVRAM.**
3. You may also want to make a list of the existing ID/LUN mapping information, because the default restoration will erase the ID/LUN mapping associations (i.e., which logical drive is associated with which host ID/LUN).
4. Power the storage system off.
5. Insert a straightened paper clip to the Restore Default button on controller, then press and hold until the Restore Default LED lights up.

NOTE: During restoration, the Restore Default LED lights up in 🟠. It lights up in 🟢 after the restoration process is complete.

6. In the firmware, use **Import NVRAM from Reserved Space or Restore NVRAM from Files** to restore your previous settings. ID/LUN mapping configuration is restored after applying your previous settings.

User Warning

This is a Class A Information Technology product which may cause radio frequency interference when used in a residential area, in which case the user will be required to take certain appropriate measures/ troubleshooting.